CK Engineering LLC.

19229 38th PL NE
Lake Forest Park, WA 98155

Phone: (206) 417-0670

STRUCTURAL CALCULATIONS

Lateral & Gravity Design
23-043

12/8/2023

NEW HOME AT:
6715 SE 27TH ST.
Mercer Island, WA 98040
December 8, 2023

This is a beta release of the new ATC Hazards by Location website. Please contact us with feedback.

The ATC Hazards by Location website will not be updated to support ASCE 7-22. Find out why.

Hazards by Location

Search Information

Address: 6175 SE 27th St, Mercer Island, WA 98040, USA

Coordinates: 47.5868832, -122.2510951

Elevation: 82 ft

Timestamp: 2023-11-24T21:05:14.358Z

Hazard Type: Wind

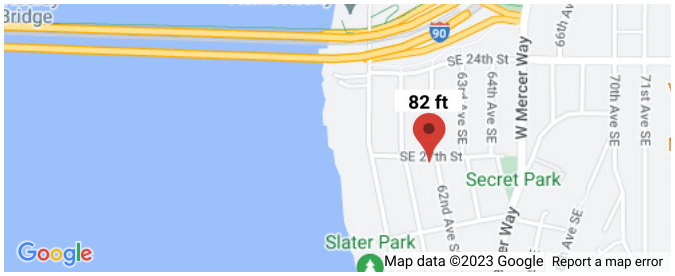

ASCE 7-16

MRI 10-Year	67 mph
MRI 25-Year	73 mph
MRI 50-Year	78 mph
MRI 100-Year	83 mph
Risk Category I	92 mph
Risk Category II	97 mph
Risk Category III	104 mph
Risk Category IV	108 mph

ASCE 7-10

MRI 10-Year	72 mph
MRI 25-Year	79 mph
MRI 50-Year	85 mph
MRI 100-Year	91 mph
Risk Category I	100 mph
Risk Category II	110 mph
Risk Category III-IV	115 mph

ASCE 7-05

ASCE 7-05 Wind Speed	85 mph

The results indicated here DO NOT reflect any state or local amendments to the values or any delineation lines made during the building code adoption process. Users should confirm any output obtained from this tool with the local Authority Having Jurisdiction before proceeding with design.

Please note that the ATC Hazards by Location website will not be updated to support ASCE 7-22. Find out why.

Disclaimer

Hazard loads are interpolated from data provided in ASCE 7 and rounded up to the nearest whole integer. Per ASCE 7, islands and coastal areas outside the last contour should use the last wind speed contour of the coastal area – in some cases, this website will extrapolate past the last wind speed contour and therefore, provide a wind speed that is slightly higher. NOTE: For queries near wind-borne debris region boundaries, the resulting determination is sensitive to rounding which may affect whether or not it is considered to be within a wind-borne debris region.

Mountainous terrain, gorges, ocean promontories, and special wind regions shall be examined for unusual wind conditions.

While the information presented on this website is believed to be correct, ATC and its sponsors and contributors assume no responsibility or liability for its accuracy. The material presented in the report should not be used or relied upon for any specific application without competent examination and verification of its accuracy, suitability and applicability by engineers or other licensed professionals. ATC does not intend that the use of this information replace the sound judgment of such competent professionals, having experience and knowledge in the field of practice, nor to substitute for the standard of care required of such professionals in interpreting and applying the results of the report provided by this website. Users of the information from this website assume all liability arising from such use. Use of the output of this website does not imply approval by the governing building code bodies responsible for building code approval and interpretation for the building site described by latitude/longitude location in the report.

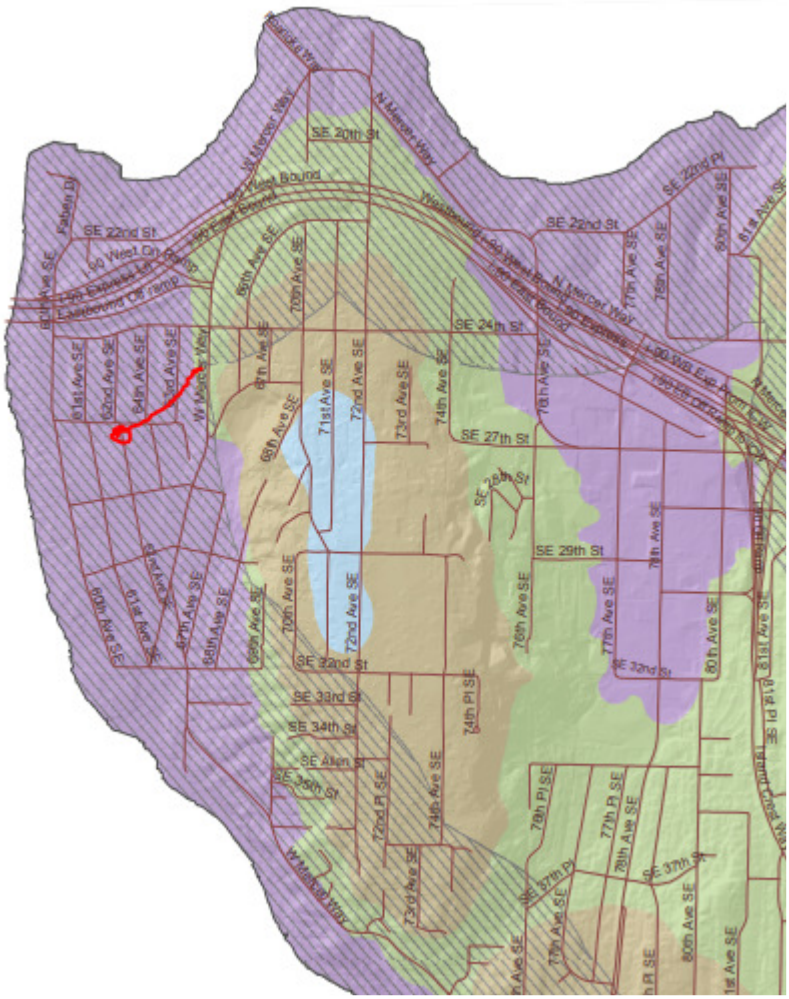
SE 20th St
N Mercer Way
SE 22nd St
SE 22nd Pl
SE 24th St
SE 27th St
SE 28th St
SE 29th St
SE 32nd St
SE 33rd St
SE 34th St
SE Allen St
SE 35th St
SE 37th St
SE 37th Pl
W Mercer Way
61st Ave SE
62nd Ave SE
64th Ave SE
66th Ave SE
67th Ave SE
68th Ave SE
69th Ave SE
70th Ave SE
71st Ave SE
72nd Ave SE
73rd Ave SE
74th Ave SE
76th Ave SE
77th Ave SE
78th Ave SE
80th Ave SE
81st Ave SE
72nd Pl SE
74th Pl SE
76th Pl SE
77th Pl SE
78th Pl SE
80th Ave SE
81st Pl SE
Westbound I-90 West Bound
I-90 East Bound
I-90 West On Ramp
I-90 Express Ln
Eastbound Off ramp
I-90 WB Exp Ramp
I-90 Exp Off Ramp
I-90 Exp Off Ramp
Fabian Dr

This is a beta release of the new ATC Hazards by Location website. Please contact us with feedback.

The ATC Hazards by Location website will not be updated to support ASCE 7-22. Find out why.

Hazards by Location

Search Information

Address:	6175 SE 27th St, Mercer Island, WA 98040, USA
Coordinates:	47.5868832, -122.2510951
Elevation:	82 ft
Timestamp:	2023-11-24T21:06:19.670Z
Hazard Type:	Seismic
Reference Document:	ASCE7-16
Risk Category:	I
Site Class:	D-default

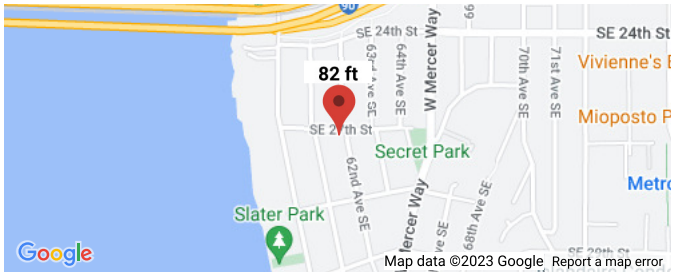

Basic Parameters

Name	Value	Description
S_S	1.4	MCE_R ground motion (period=0.2s)
S_1	0.488	MCE_R ground motion (period=1.0s)
S_{MS}	1.68	Site-modified spectral acceleration value
S_{M1}	* null	Site-modified spectral acceleration value
S_{DS}	1.12	Numeric seismic design value at 0.2s SA
S_{D1}	* null	Numeric seismic design value at 1.0s SA

* See Section 11.4.8

Additional Information

Name	Value	Description
SDC	* null	Seismic design category
F_a	1.2	Site amplification factor at 0.2s
F_v	* null	Site amplification factor at 1.0s
CR_S	0.902	Coefficient of risk (0.2s)
CR_1	0.896	Coefficient of risk (1.0s)
PGA	0.599	MCE_G peak ground acceleration
F_{PGA}	1.2	Site amplification factor at PGA
PGA_M	0.719	Site modified peak ground acceleration
T_L	6	Long-period transition period (s)
SsRT	1.4	Probabilistic risk-targeted ground motion (0.2s)
SsUH	1.552	Factored uniform-hazard spectral acceleration (2% probability of exceedance in 50 years)
SsD	3.202	Factored deterministic acceleration value (0.2s)
S1RT	0.488	Probabilistic risk-targeted ground motion (1.0s)
S1UH	0.544	Factored uniform-hazard spectral acceleration (2% probability of exceedance in 50 years)
S1D	1.307	Factored deterministic acceleration value (1.0s)
PGAd	1.106	Factored deterministic acceleration value (PGA)

* See Section 11.4.8

The results indicated here DO NOT reflect any state or local amendments to the values or any delineation lines made during the building code adoption process. Users should confirm any output obtained from this tool with the local Authority Having Jurisdiction before proceeding with design.

Please note that the ATC Hazards by Location website will not be updated to support ASCE 7-22. Find out why.

Disclaimer

Hazard loads are provided by the U.S. Geological Survey Seismic Design Web Services.

While the information presented on this website is believed to be correct, ATC and its sponsors and contributors assume no responsibility or liability for its accuracy. The material presented in the report should not be used or relied upon for any specific application without competent examination and verification of its accuracy, suitability and applicability by engineers or other licensed professionals. ATC does not intend that the use of this information replace the sound judgment of such competent professionals, having experience and knowledge in the field of practice, nor to substitute for the standard of care required of such professionals in interpreting and applying the results of the report provided by this website. Users of the information from this website assume all liability arising from such use. Use of the output of this website does not imply approval by the governing building code bodies responsible for building code approval and interpretation for the building site described by latitude/longitude location in the report.

Design Criteria

Scope of Work:	Lateral & Gravity Design		
Site Address:	6715 SE 27TH ST. Mercer Island, WA 98040		
Number of Stories:	3	Engineer:	PK

Roof Loading

Roofing	Torch Down	2.0
Sheathing	3/4" Plywood	2.3
Insulation	Roll/Batt	3.0
Ceiling	5/8" GWB	2.8
Framing	Rafters & Beams	3.0
Miscellaneous	fixtures, mechanical, electrical, etc.	1.9
	TOTAL DEAD LOAD:	15.0 psf
	ROOF SNOW LOAD:	25.0 psf

Upper Floor Loading

Floor Covering	Carpet/Hardwood/Tile	3.0
Sheathing	3/4" T&G	2.3
Ceiling	1/2" GWB	2.2
Joists	I-Joists	2.1
Beams		4.0
Miscellaneous	fixtures, mechanical, electrical, etc.	1.4
	TOTAL DEAD LOAD:	15.0 psf
	FLOOR LIVE LOAD:	40.0 psf

Main Floor Loading

Floor Covering	Carpet/Hardwood/Tile	3.0
Sheathing	3/4" T&G	2.3
Ceiling	5/8" GWB	2.8
Joists	I-Joists	2.1
Beams		4.2
Miscellaneous	fixtures, mechanical, electrical, etc.	0.6
	TOTAL DEAD LOAD:	15.0 psf
	FLOOR LIVE LOAD:	40.0 psf

Soil Bearing Capacity:	1500 psf
Frost Depth:	18 in

LATERAL & GRAVITY DESIGN

KEY PLANS

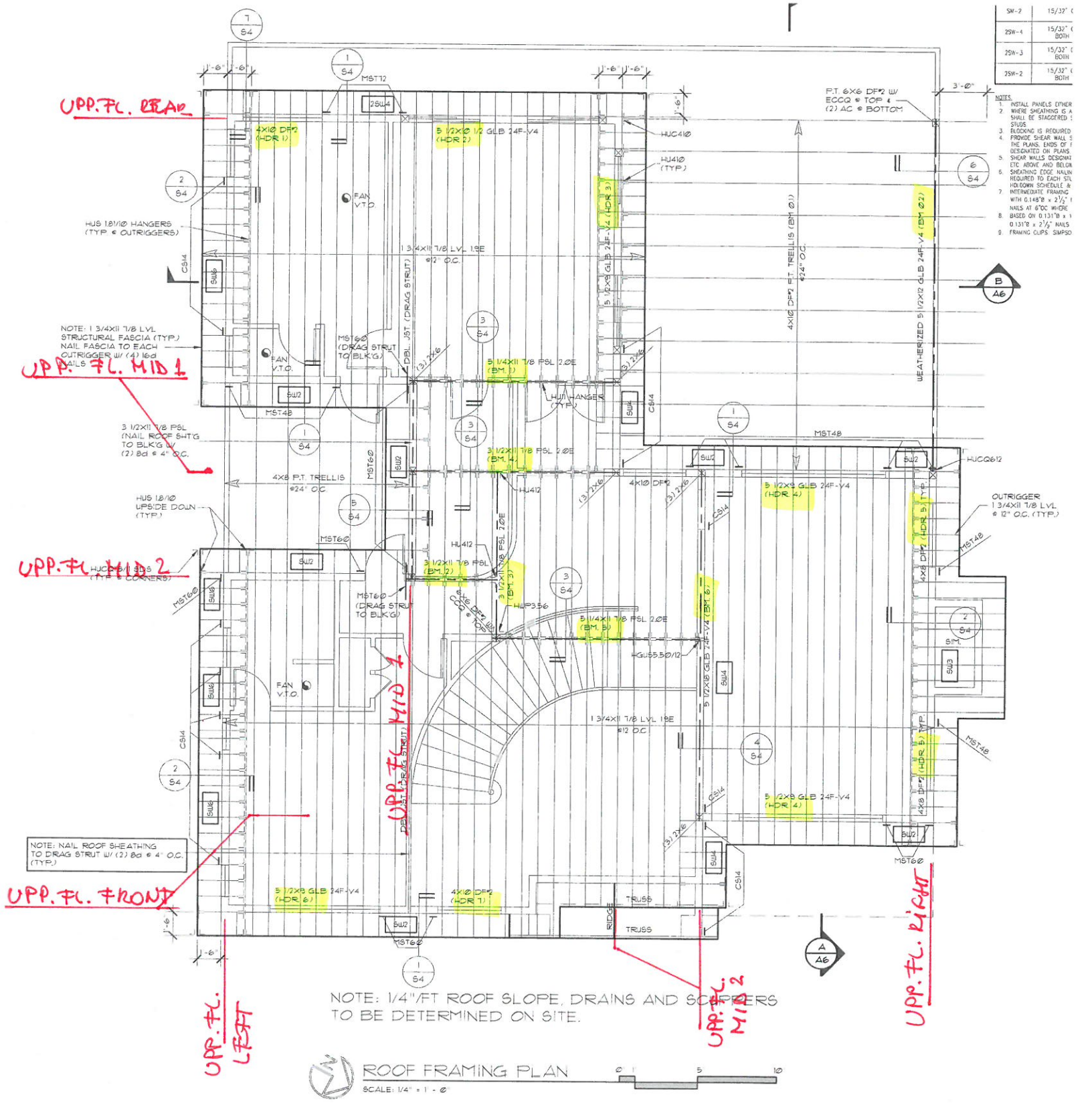

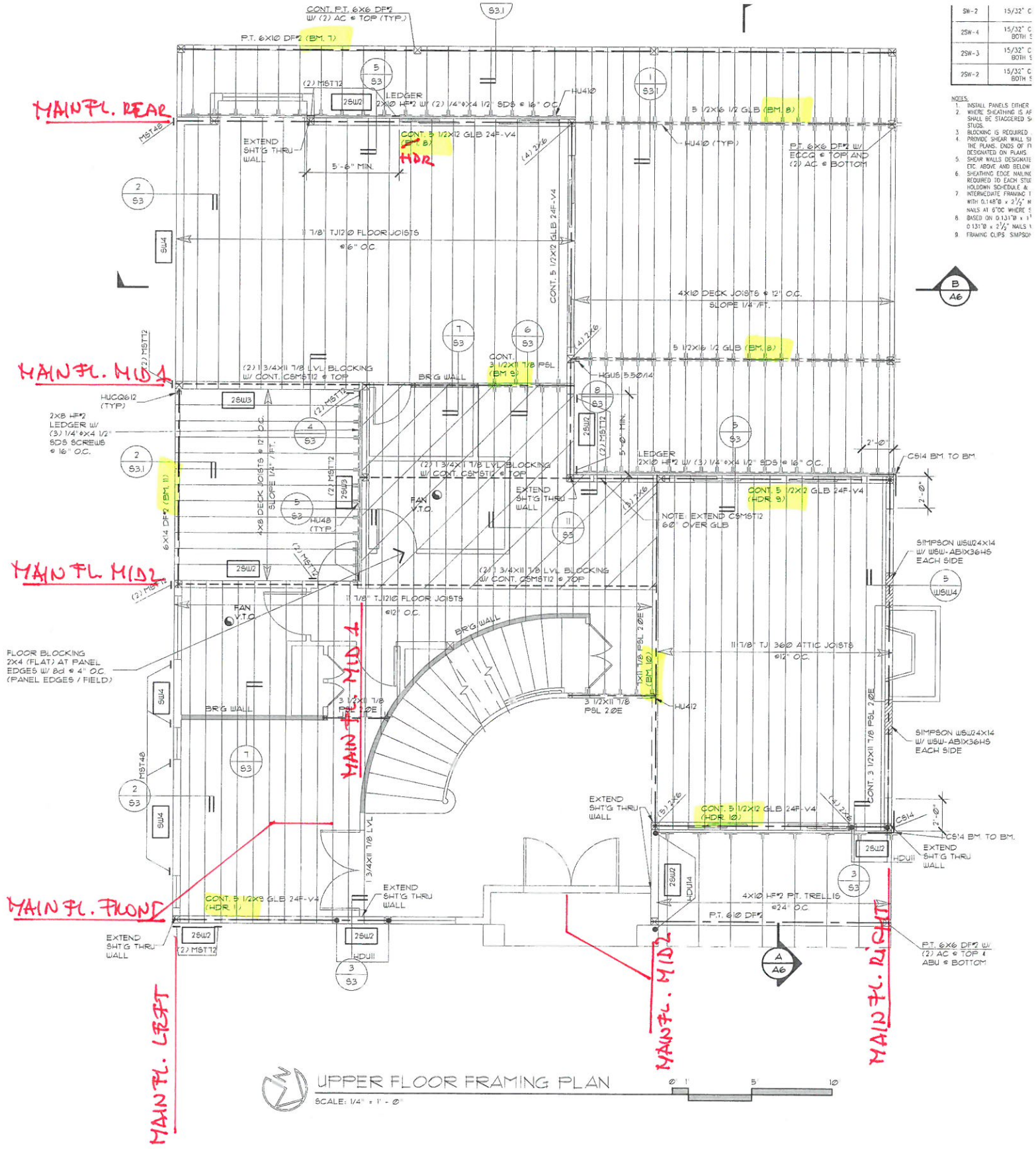

SW-2	15/32" C
2SW-4	15/32" C BOTH S
2SW-3	15/32" C BOTH S
2SW-2	15/32" C BOTH S

NOTES:
1. INSTALL PANELS EITHER
2. WHERE SHEATHING IS AF SHALL BE STAGGERED SI STUDS.
3. BLOCKING IS REQUIRED
4. PROVIDE SHEAR WALL SI THE PLANS. ENDS OF PI DESIGNATED ON PLANS
5. SHEAR WALLS DESIGNATE ETC. ABOVE AND BELOW
6. SHEATHING EDGE NAILING REQUIRED TO EACH STUD HOLDDOWN SCHEDULE &
7. INTERMEDIATE FRAMING T WITH 0.148"Ø x 2½" N NAILS AT 6"OC WHERE S
8. BASED ON 0.131"Ø x 1" 0.131"Ø x 2½" NAILS
9. FRAMING CLIPS SIMPSO

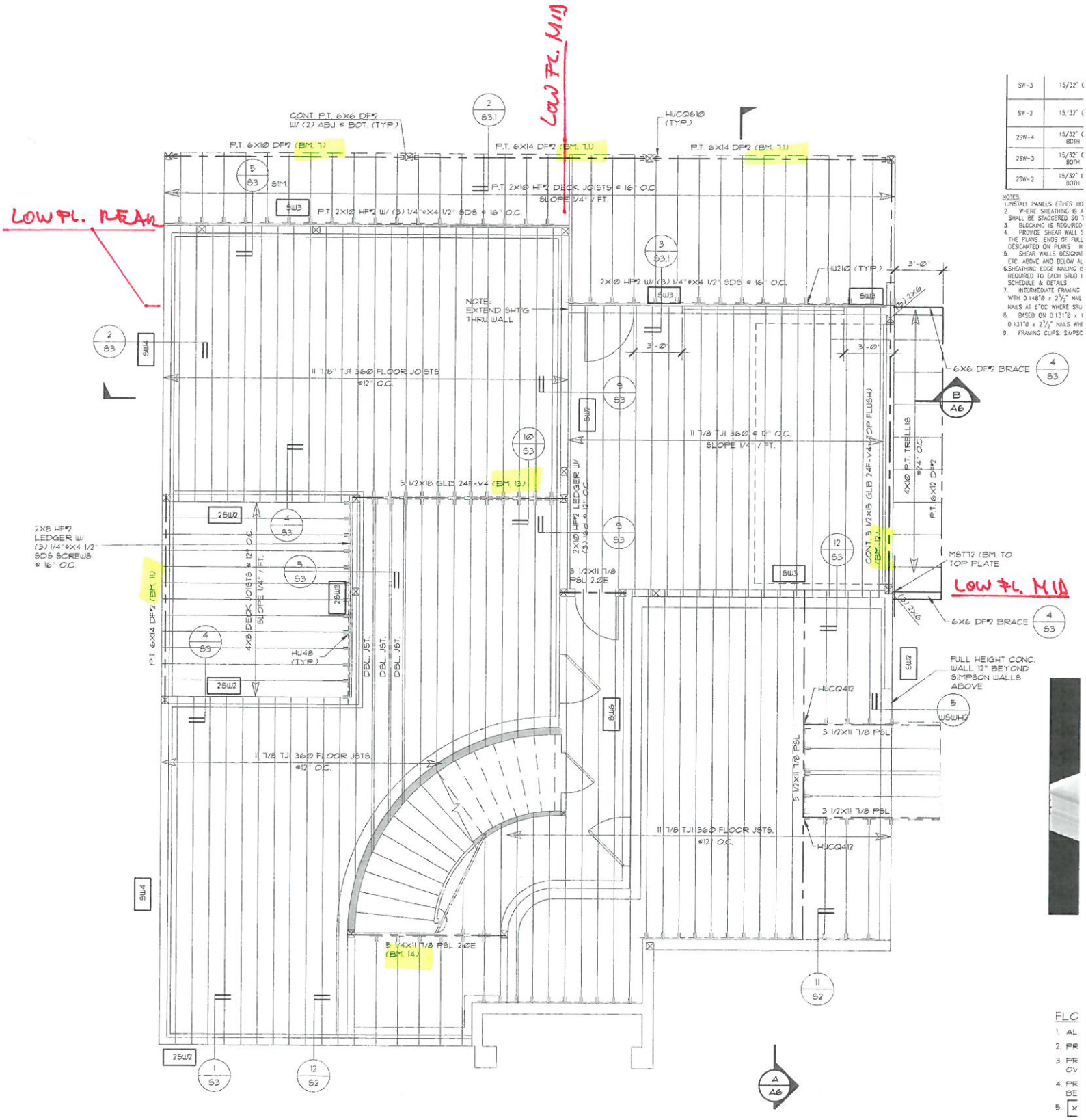

SW-3	15/32" C
SW-2	15/32" C
2SW-4	15/32" C BOTH
2SW-3	15/32" C BOTH
2SW-2	15/32" C BOTH

NOTES:
1. INSTALL PANELS EITHER HO
2. WHERE SHEATHING IS A SHALL BE STAGGERED SO T
3. BLOCKING IS REQUIRED
4. PROVIDE SHEAR WALL S THE PLANS. ENDS OF FULL DESIGNATED ON PLANS. H
5. SHEAR WALLS DESIGNAT ETC. ABOVE AND BELOW AL
6. SHEATHING EDGE NAILING IS REQUIRED TO EACH STUD I SCHEDULE & DETAILS
7. INTERMEDIATE FRAMING WITH 0.148"Ø x 2½" NAIL NAILS AT 6"OC WHERE STU
8. BASED ON 0.131"Ø x 0.131"Ø x 2½" NAILS WHI
9. FRAMING CLIPS: SIMPSO

FLC
1. AL
2. PR
3. PR OV
4. PR BE
5. [X]
6. AL NO

Joist block attac adjo Addl restr Sect

MAIN FLOOR FRAMING PLAN

SCALE: 1/4" = 1' - 0"

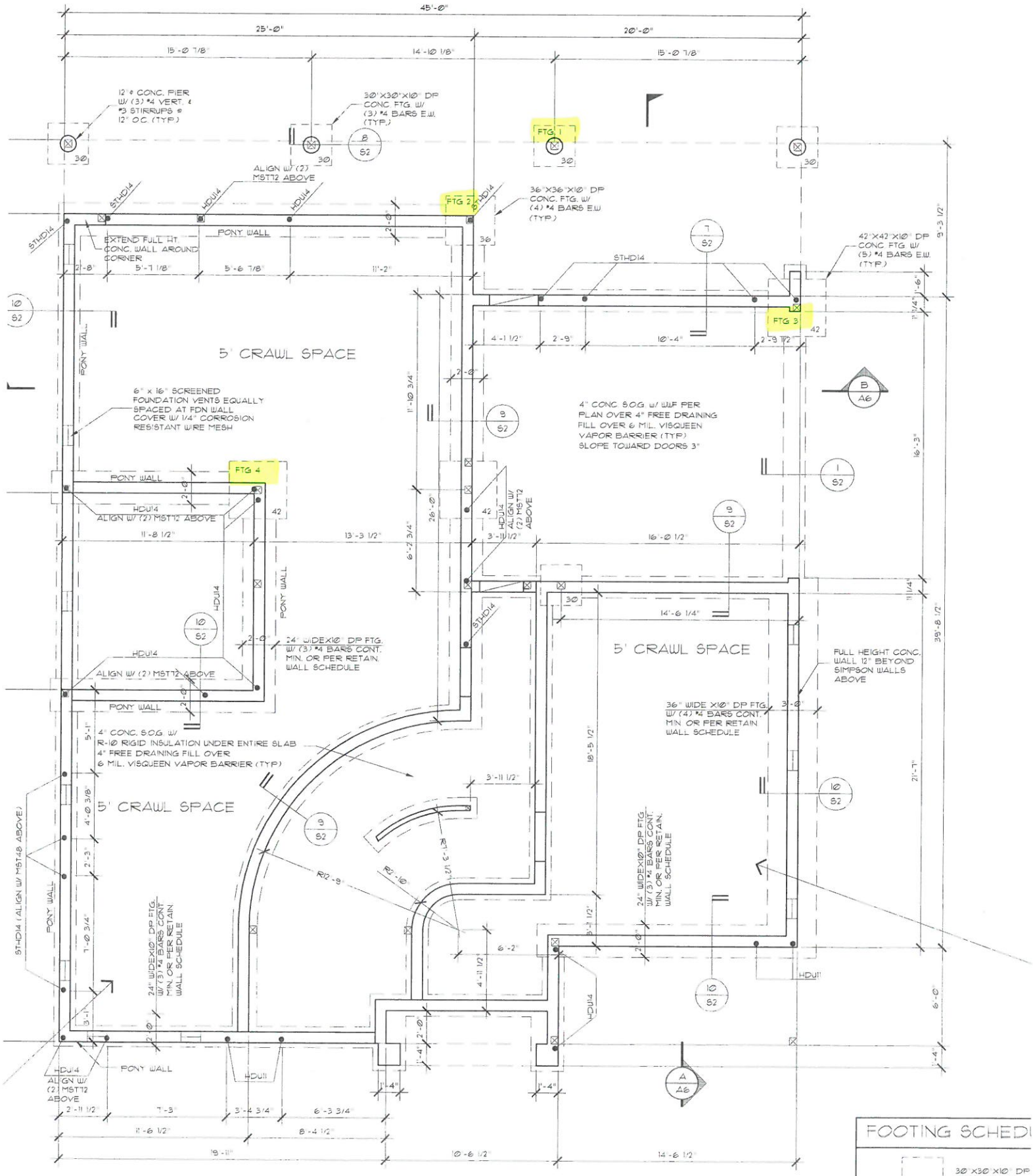
45'-0"
25'-0"
20'-0"
15'-0 7/8"
14'-10 1/8"
15'-0 7/8"
12" ø CONC. PIER W/ (3) #4 VERT. & #3 STIRRUPS @ 12" O.C. (TYP.)
30"X30"X10" DP CONC. FTG. W/ (3) #4 BARS E.W. (TYP.)
FTG. 1
ALIGN W/ (2) MST12 ABOVE
STHD14
HDU14
FTG. 2
36"X36"X10" DP CONC. FTG. W/ (4) #4 BARS E.W. (TYP.)
EXTEND FULL HT. CONC. WALL AROUND CORNER
PONY WALL
42"X42"X10" DP CONC FTG W/ (5) #4 BARS E.W. (TYP.)
FTG. 3
5' CRAWL SPACE
6" x 16" SCREENED FOUNDATION VENTS EQUALLY SPACED AT FDN WALL COVER W/ 1/4" CORROSION RESISTANT WIRE MESH
4" CONC. SOG W/ WWF PER PLAN OVER 4" FREE DRAINING FILL OVER 6 MIL. VISQUEEN VAPOR BARRIER (TYP.) SLOPE TOWARD DOORS 3"
FTG. 4
24" WIDEX10" DP FTG. W/ (3) #4 BARS CONT. MIN. OR PER RETAIN. WALL SCHEDULE
4" CONC. SOG W/ R-10 RIGID INSULATION UNDER ENTIRE SLAB 4" FREE DRAINING FILL OVER 6 MIL. VISQUEEN VAPOR BARRIER (TYP.)
5' CRAWL SPACE
FULL HEIGHT CONC. WALL 12" BEYOND SIMPSON WALLS ABOVE
36" WIDE X10" DP FTG. W/ (4) #4 BARS CONT. MIN. OR PER RETAIN. WALL SCHEDULE
5' CRAWL SPACE
ALIGN W/ (2) MST48 ABOVE
HDU11
ALIGN W/ (2) MST72 ABOVE
R12'-9"
R12'-10"
R7'-3 1/2"
19'-11"
10'-6 1/2"
14'-6 1/2"
FOUNDATION PLAN
SCALE: 1/4" = 1'-0"
0 1 5 10
FOOTING SCHED
30"X30"X10" DP CONC. FTG. W/ (3) #4 BARS E.W.
36"X36"X10" DP CONC. FTG. W/ (4) #4 BARS E.W.

Type of construction: NEW
Applicable Building Codes: IBC 2018, ASCE 7/SEI 7-16
Location: 6715 SE 27TH ST., Mercer Island, WA 98040

Work performed : **Lateral & Gravity Design**

WIND DESIGN:

$P_s = \lambda I_w P_{s30} K_{zt}$

Exposure :	C	Wind Exposure Category as set forth in Section 26.7 of ASCE 7-16
Wind Speed =	85 MPH	Basic Wind Speed (LRFD) as used in Figure 28.5 of ASCE 7-16 and converted to (ASD)
P_{s30} =		Simplified design wind pressure for Exposure B, at h = 30 feet and for I = 1.0, from Figure 28.5-1
I_w =	1	Importance factor as defined in Table 1.5-2 of ASCE 7-16
λ =	1.39	Adjustment factor for building height and exposure from Figure 28.5-1 of ASCE 7-16
K_{ZT} =	1.00	Adjustment factor for increased wind speed due to a hill or escarpment from Section 26.8 of ASCE 7-16

Roof slope :

		rise		run		
Front/Rear	$\tan^{-1}$ (	Flat	/	12	)	= 0.0 degrees
Left/Right	$\tan^{-1}$ (	Flat	/	12	)	= 0.0 degrees

29 ft Mean Elevation

Number of floors: 3

0

Average uplift (F/R)= -10.9 psf Based on wind zones 'G' and 'H'
Average uplift (R/L)= -10.9 psf Based on wind zones 'G' and 'H'

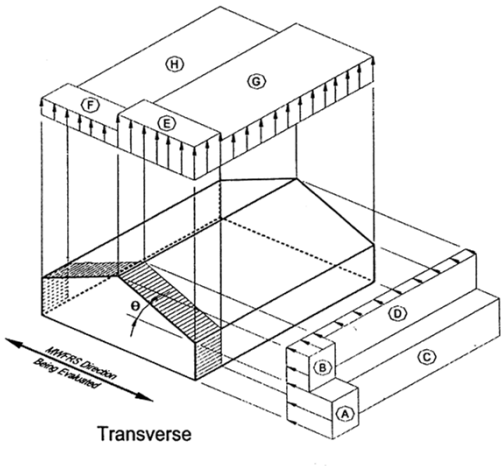

	End zone of wall Front/Rear	Left/Right	End zone of roof Front/Rear	Left/Right
P_{s30} =	A = 11.5 psf	11.5 psf	B = -5.9 psf	-5.9 psf
P_s =	16.0 psf	16.0 psf	-8.2 psf	-8.2 psf

	Interior zone of wall Front/Rear	Left/Right	Interior zone of roof Front/Rear	Left/Right
P_{s30} =	C = 7.6 psf	7.6 psf	D = -3.5 psf	-3.5 psf
P_s =	10.6 psf	10.6 psf	-4.9 psf	-4.9 psf

WIND LOAD CALCULATIONS

FRONT ⟶ REAR

ΣV 3RD FLOOR =

WIND ZONE	A	C										
AVE. HEIGHT	6	6										
AVE. WIDTH	8	40										
Ps	16.01	10.58	0.00	0.00	0.00	0.00	0.00	0.00	0.00	0.00	0.00	0.00
SUBTOTAL	768	2539	0	0	0	0	0	0	0	0	0	0
TOTAL	3,307 lbs											

ΣV 2ND FLOOR =

WIND ZONE	A	C										
AVE. HEIGHT	10.5	10.5										
AVE. WIDTH	8	40										
Ps	16.01	10.58	0.00	0.00	0.00	0.00	0.00	0.00	0.00	0.00	0.00	0.00
SUBTOTAL	1345	4443	0	0	0	0	0	0	0	0	0	0
TOTAL	5,788 lbs											

ΣV (1ST FLOOR) =

WIND ZONE	A	C	C									
AVE. HEIGHT	10.5	10.5	7.5									
AVE. WIDTH	8	12	25									
Ps	16.01	10.58	10.58	0.00	0.00	0.00	0.00	0.00	0.00	0.00	0.00	0.00
SUBTOTAL	1345	1333	1984	0	0	0	0	0	0	0	0	0
TOTAL	4,661 lbs											

WIND LOAD CALCULATIONS

LEFT ⟶ RIGHT

ΣV 3RD FLOOR =

WIND ZONE	A	C										
AVE. HEIGHT	6	6										
AVE. WIDTH	9	46										
Ps	16.01	10.58	0.00	0.00	0.00	0.00	0.00	0.00	0.00	0.00	0.00	0.00
SUBTOTAL	864	2920	0	0	0	0	0	0	0	0	0	0
TOTAL	3,784 lbs											

ΣV 2ND FLOOR =

WIND ZONE	A	C										
AVE. HEIGHT	10.5	10.5										
AVE. WIDTH	9	46										
Ps	16.01	10.58	0.00	0.00	0.00	0.00	0.00	0.00	0.00	0.00	0.00	0.00
SUBTOTAL	1513	5110	0	0	0	0	0	0	0	0	0	0
TOTAL	6,623 lbs											

ΣV (1ST FLOOR) =

WIND ZONE	A	C	C									
AVE. HEIGHT	10.5	10.5	7.5									
AVE. WIDTH	9	15	22									
Ps	16.01	10.58	10.58	0.00	0.00	0.00	0.00	0.00	0.00	0.00	0.00	0.00
SUBTOTAL	1513	1666	1746	0	0	0	0	0	0	0	0	0
TOTAL	4,925 lbs											

ρ CALCS:

3RD FLOOR CALCULATIONS:

Plate Height:	9.00 ft
Total length of Shearwall in Shortest Line:	12.00 ft
Length of Shortest Segment within Shear Line:	3.00 ft
Length of Longest Segment in Shear Line:	3.00 ft

Tributary Area: 1.0
Total Area: 2.0

ρ = 1.00
ASCE 7-16 12.3.4.2 b

2ND FLOOR CALCULATIONS:

Plate Height:	9.00 ft
Total length of Shearwall in Shortest Line:	9.00 ft
Length of Shortest Shearwall within Shear Line:	3.00 ft
Length of Longest Wall in Shear Line:	3.00 ft

Tributary Area: 1.0
Total Area: 2.0

ρ = 1.00
ASCE 7-16 12.3.4.2 b

MAIN FLOOR CALCULATIONS:

Plate Height:	9.00 ft
Total length of Shearwall in Shortest Line:	10.00 ft
Length of Shortest Shearwall within Shear Line:	4.50 ft
Length of Longest Wall in Shear Line:	5.50 ft

Tributary Area: 1.0
Total Area: 2.0

ρ = 1.00
ASCE 7-16 12.3.4.2 b

All loads in pounds per square foot

WALL DEAD LOAD =	25 psf	ROOF DEAD LOAD =	15.0 psf
FLAT ROOF SNOW LOAD =	25 psf	UPPER FLOOR D.L. =	15.0 psf
RED. S.L. (20%*S.L.) =	0	LOWER FLOOR D.L. =	15.0 psf
		FLOOR LIVE LOAD =	40.0 psf

SEISMIC DESIGN:

$E = E_h + E_v$

$E = \rho Q_{E+.2S_{DS}D}$ $\quad Q_E = V = C_sW$

ρ =	1.00						
Site Class =	D	Geotech Report	No	20% Seismic Load Increase			
I_E =	1	Importance factor as defined in Table 11.5-1					
R =	6.5						
h_n =	29	Total height of structure					

$V = 0.7S_{DS}I_EW / R$ $\quad S_{DS} = 2/3\ S_{MS}$ $\quad Ss =$ 140.0% $\quad S_{MS} = 168.0\%$ $\quad$ **V =** 0.121 **W**

$V_{max} = S_{D1}I_EW / T_aR$ $\quad S_{MS} = (Fa)(Ss)$ $\quad Fa =$ 1.20 $\quad S_{DS} = 112.0\%$ $\quad$ **E =** 0.121 **W**

$T_a = 0.02h_n^{0.75}$ $\quad S_{D1} = 2/3\ S_{M1}$ $\quad S_1 =$ 48.8% $\quad S_{M1} = 73.2\%$

T_a = 0.25 s $\quad S_{M1} = (Fv)(S_1)$ $\quad Fv =$ 1.50 $\quad S_{D1} = 48.8\%$ $\quad$ **Cs =** 0.121

3RD FLOOR DIAPHRAGM LOADING:

W (ROOF) =

LENGTH	WIDTH	LOAD	TOTAL
28	20	15.0	8400
26	20	15.0	7800
34	17	15.0	8670
25	12	15.0	4500
		15.0	0
Area = 1958		Sub-Total=	29370

W (FLOOR) =

LENGTH	WIDTH	LOAD	TOTAL
		15.0	0
		15.0	0
		15.0	0
		15.0	0
		15.0	0
Area = 0		Sub-Total=	0

W (WALL) =

LENGTH	TRIB. HT.	LOAD	TOTAL
150	6	25.0	22500
150	6	25.0	22500
		25.0	0
		25.0	0
		25.0	0
Area = 1800		Sub-Total=	45000

TOTAL = 74370 lb

2ND FLOOR DIAPHRAGM LOADING:

W (ROOF) =

LENGTH	WIDTH	LOAD	TOTAL
20	10	15.0	3000
		15.0	0
		15.0	0
		15.0	0
		15.0	0
Area = 200		Sub-Total=	3000

W (FLOOR) =

LENGTH	WIDTH	LOAD	TOTAL
1025	1	15.0	15375
		15.0	0
		15.0	0
		15.0	0
		15.0	0
Area = 1025		Sub-Total=	15375

W (WALL) =

LENGTH	TRIB. HT.	LOAD	TOTAL
150	9	25.0	33750
150	9	25.0	33750
		25.0	0
		25.0	0
		25.0	0
Area = 2700		Sub-Total=	67500

TOTAL = 85875 lb

1ST FLOOR DIAPHRAGM LOADING:

W (ROOF) =

LENGTH	WIDTH	LOAD	TOTAL
		15.0	0
		15.0	0
		15.0	0
		15.0	0
		15.0	0
Area = 0		Sub-Total=	0

W (FLOOR) =

LENGTH	WIDTH	LOAD	TOTAL
1498	1	15.0	22470
		15.0	0
		15.0	0
		15.0	0
		15.0	0
Area = 1498		Sub-Total=	22470

W (WALL) =

LENGTH	TRIB. HT.	LOAD	TOTAL
150	7.5	25.0	28125
150	7.5	25.0	28125
		25.0	0
		25.0	0
		25.0	0
Area = 2250		Sub-Total=	56250

TOTAL = 78720 lb

V (3RD FLOOR) = .121 x 74370 lb = 8970 lbs

V (2ND FLOOR) = .121 x 85875 lb = 10358 lbs

V (1ST FLOOR) = .121 x 78720 lb = 9495 lbs

REDISTRIBUTE:

ΣV x ρ	height	ΣV x height
8970 lb	27	242194
10358 lb	17	176083
9495 lb	7	66464
TOTAL = 28823 lb		TOTAL = 484742

$$E\ (3RD) = \frac{\Sigma V \times height \times \Sigma V\ TOTAL}{\Sigma V \times height\ TOTAL} = 14401 \text{ lbs}$$

$$E\ (2ND) = \frac{\Sigma V \times height \times \Sigma V\ TOTAL}{\Sigma V \times height\ TOTAL} = 10470 \text{ lbs}$$

$$E\ (1ST) = \frac{\Sigma V \times height \times \Sigma V\ TOTAL}{\Sigma V \times height\ TOTAL} = 3952 \text{ lbs}$$

SUMMARY:

	WIND (front-rear)	WIND (left-right)	SEISMIC
ΣV (3RD) =	3307 lbs	3784 lbs	17281 lbs
ΣV (2ND) =	5788 lbs	6623 lbs	12564 lbs
ΣV (MAIN) =	4661 lbs	4925 lbs	4742 lbs
TOTAL =	13757 lbs	15331 lbs	34587 lbs

DIAPHRAGM SHEAR:

Total diaphragm length = 50.0 ft Sub-diaphragm length = 22.0 ft
Diaphragm width = 25.0 ft ΣV (3RD) = 17,281 lbs

$$v = \frac{\Sigma V(roof)}{(2)(width)} = \frac{7604 \text{ lb}}{50 \text{ ft}} = 152 \text{ PLF}$$

IBC Table 2306.3.1 → 240 PLF

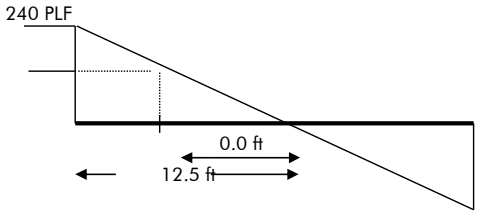

USE 15/32 CDX ROOF SHEATHING OR 3/4 T&G CDX SUBFLOORING w/8d AT 6 in o/c(PANEL EDGE), END 8d AT 12in o/c(PANEL FIELD)

CHORD:

Sub-diaphragm length = 22.0 ft Total-diaphragm length = 50.0 ft
Sub-diaphragm width = 25.0 ft

$$T = \frac{M}{B} = \frac{\Sigma V \times (\text{diaphragm length})}{8 \times (\text{diaphragm width})} = \frac{7604 \times 22 \text{ ft}}{8 \times 25 \text{ ft}} = 836 \text{ lbs}$$

Top Plate Size: 2x6 Species/Grade: HF #2

Area = 8.25 in^2 F_t = 525 psi
Load duration (C_D) = 1.33 $T_{allowable}$ = Area x C_D x F_t = 5,761 lbs

Since T allowable is greater than T applied, OK.

SHEAR CAPACITY OF 10d COMMON NAIL = 102 lbs 102 x Cd x p = 136 lbs 2018 NDS

$$\text{\# OF NAILS PER 4 FT SPLICE} = \frac{836 \text{ lbs}}{136 \text{ lbs}} = 6$$

USE 2x6 HF #2 TOP PLATE W/ (8) 10d COMMON NAILS PER SPLICE.

Lateral Calculation Key

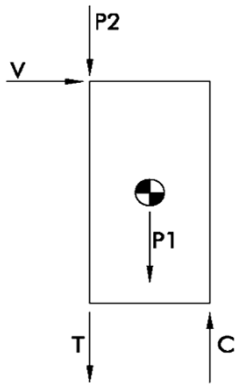

V = Shear, plf
H = Height of shearwall
L = Length of shearwall
P1 = Weight of shearwall and connected framing
P2 = Weight of adjacent wall

T = V x H - 0.5P1 - P2 = Tension reaction to be resisted by holdown
C = V x H + 0.5P1 = Compression reaction

ASD Basic Load Combinations

For calculation of tension and compression forces in compliance with ASCE 7-16 2.4.1

Tension Equations (Uplift)

7. 0.6D + W
8. $(0.6 - 0.14S_{DS})D + E$ → 0.44 D + E

*8. $(0.6 - 0.14S_{DS})D + 2.5\ E$ → 0.44 D + 2.5 E

Compression Equations

5. D + W
5. $(1 + 0.14S_{DS})D + E$ → 1.16 D + E
6. D + 0.75W + 0.75L + 0.75S
6. $(1.0 + 0.105S_{DS})D + 0.75E + 0.75L + 0.75S$ → 1.12 D + 0.75 E + 0.75 L + 0.75 S

*5. $(1 + 0.14S_{DS})D + 2.5E$ → 1.16 D + 2.5 E
*6. $(1.0 + 0.105S_{DS})D + 1.875E + 0.75L + 0.75S$ → 1.12 D +1.875 E + 0.75 L + 0.75 S

** Equations include overstrength factor.*

Note: The 0.7 factor for Earthquake loading has already been incorporated into the calculation of the lateral design force E_h, but not E_v. Therefore this factor has been omitted from equations 5, 6 and 8 where appropriate.

UPPER FL. REAR (MASTER SUITE)

SHEARWALL

Floor Info

Upper	Floor Level, e.g. Upper, Main, Lower
Lt-Rt	Load Direction, e.g. Left-Right, Front-Rear
	(For Left Wall, Use Front-Rear Load Direction)
CDX	Sheathing type
	Values in accordance with AF&PA SDPWS-2015
Roof	Resisting Dead Load
	(e.g. Roof, Upper Floor, Main Floor)
5.50 ft	Total Length of Shearwalls

WIND

Tributary Width (Upper Floor)

9.0	tributary width
50.0	total width

Tributary Width (Main Floor)

1.0	tributary width
2.0	total width

Tributary Width (Lower Floor)

1.0	tributary width
2.0	total width

SEISMIC

Tributary Area (Upper Floor)

9.0	tributary area
50.0	total area

Tributary Area (Main Floor)

1.0	tributary area
2.0	total area

Tributary Area (Lower Floor)

1.0	tributary area
2.0	total area

V(from upper)=	3784 lb	17281 lb
V(from main)=	0 lb	0 lb
V(from lower)=	0 lb	0 lb
Σ (Wind) =	3,784 lb	Σ (Smc) = 17,281 lb
v =	124 PLF	v = 566 PLF

Height of Shearwall = 9.0 ft
Length of Shearwall = 5.5 ft
Aspect Ratio OK
Use alternate R factor for seismic? No

Weight of Shearwall = 10.0 lbs
Tributary width for dead load = 10.0 ft
Length of adjoining wall = 1.0 ft

3x framing required per IBC

SDPWS, Table 4.3A → 0.93 x 707 = 658 PLF → USE (2)SW4

Seismic controls shearwall design

C_{TOTAL} =	(floor above) + (this floor) =		+	3563 lbs	=	3563 lbs Seismic controls
T_{TOTAL} =	(floor above) + (this floor) =		+	4691 lbs	=	4691 lbs Load case 8 controls - Seismic

Seismic controls holdown design

Where overstrength factor is applicable, use this value for E in equations 5, 6, and 8: E= 5090 lbs

USE SIMPSON DESIGNED HOLDOWN: MST60
OR AT FOUNDATION / INTERIOR WALLS USE: HDU8-SDS2.5

UPPER FL. MID 1 (DECK, ATTIC)

SHEARWALL

Floor Info

Upper	Floor Level, e.g. Upper, Main, Lower
Lt-Rt	Load Direction, e.g. Left-Right, Front-Rear
	(For Left Wall, Use Front-Rear Load Direction)
CDX	Sheathing type
	Values in accordance with AF&PA SDPWS-2015
Roof	Resisting Dead Load
	(e.g. Roof, Upper Floor, Main Floor)
13.50 ft	Total Length of Shearwalls

WIND

Tributary Width (Upper Floor)

14.5	tributary width
50.0	total width

Tributary Width (Main Floor)

1.0	tributary width
2.0	total width

Tributary Width (Lower Floor)

1.0	tributary width
2.0	total width

SEISMIC

Tributary Area (Upper Floor)

14.5	tributary area
50.0	total area

Tributary Area (Main Floor)

1.0	tributary area
2.0	total area

Tributary Area (Lower Floor)

1.0	tributary area
2.0	total area

V(from upper)=	3784 lb	17281 lb
V(from main)=	0 lb	0 lb
V(from lower)=	0 lb	0 lb
Σ (Wind) =	3,784 lb	Σ (Smc) = 17,281 lb
v =	81 PLF	v = 371 PLF

Height of Shearwall = 9.0 ft
Length of Shearwall = 3.2 ft
Aspect Ratio OK
Use alternate R factor for seismic? No

Weight of Shearwall = 10.0 lbs
Tributary width for dead load = 1.0 ft
Length of adjoining wall = 1.0 ft

3x framing required per IBC

SDPWS, Table 4.3A → (2w/h) x 0.93 x 595 = 393 PLF → USE SW2

Seismic controls shearwall design

C_{TOTAL} =	(floor above) + (this floor) =		+	2339 lbs	=	2339 lbs Seismic controls
T_{TOTAL} =	(floor above) + (this floor) =		+	3220 lbs	=	3220 lbs Load case 8 controls - Seismic

Seismic controls holdown design

Where overstrength factor is applicable, use this value for E in equations 5, 6, and 8: E= 3341 lbs

USE SIMPSON DESIGNED HOLDOWN: MST48
OR AT FOUNDATION / INTERIOR WALLS USE: STHD14/RJ

UPPER FL. MID 2 (DECK)

SHEARWALL

Floor Info

Upper	Floor Level, e.g. Upper, Main, Lower
Lt-Rt	Load Direction, e.g. Left-Right, Front-Rear
	(For Left Wall, Use Front-Rear Load Direction)
CDX	Sheathing type
	Values in accordance with AF&PA SDPWS-2015
Roof	Resisting Dead Load
	(e.g. Roof, Upper Floor, Main Floor)
9.00 ft	Total Length of Shearwalls

WIND

Tributary Width (Upper Floor)

14.0	tributary width
50.0	total width

Tributary Width (Main Floor)

1.0	tributary width
2.0	total width

Tributary Width (Lower Floor)

1.0	tributary width
2.0	total width

SEISMIC

Tributary Area (Upper Floor)

14.0	tributary area
50.0	total area

Tributary Area (Main Floor)

1.0	tributary area
2.0	total area

Tributary Area (Lower Floor)

1.0	tributary area
2.0	total area

V(from upper)=	3784 lb	17281 lb
V(from main)=	0 lb	0 lb
V(from lower)=	0 lb	0 lb
Σ (Wind) =	3,784 lb	Σ (Smc) = 17,281 lb
v =	118 PLF	v = 538 PLF

Height of Shearwall = 9.0 ft
Length of Shearwall = 9.0 ft
Aspect Ratio OK
Use alternate R factor for seismic? No

Weight of Shearwall = 10.0 lbs
Tributary width for dead load = 1.0 ft
Length of adjoining wall = 1.0 ft

3x framing required per IBC

SDPWS, Table 4.3A → 0.93 x 595 = 553 PLF → USE SW2

Seismic controls shearwall design

C_{TOTAL} =	(floor above) + (this floor) =		+	3387 lbs	=	3387 lbs Seismic controls
T_{TOTAL} =	(floor above) + (this floor) =		+	4583 lbs	=	4583 lbs Load case 8 controls - Seismic

Seismic controls holdown design

Where overstrength factor is applicable, use this value for E in equations 5, 6, and 8: E= 4839 lbs

USE SIMPSON DESIGNED HOLDOWN: MST60
OR AT FOUNDATION / INTERIOR WALLS USE: HDU8-SDS2.5

UPPER FL. FRONT (BDRM 3, ATTIC)

SHEARWALL | WIND | SEISMIC

Floor Info

Upper	Floor Level, e.g. Upper, Main, Lower	Tributary Width (Upper Floor)			Tributary Area (Upper Floor)		
Lt-Rt	Load Direction, e.g. Left-Right, Front-Rear	11.0	tributary width		11.0	tributary area	
	(For Left Wall, Use Front-Rear Load Direction)	50.0	total width		50.0	total area	
CDX	Sheathing type	Tributary Width (Main Floor)			Tributary Area (Main Floor)		
	Values in accordance with AF&PA SDPWS-2015	1.0	tributary width		1.0	tributary area	
Roof	Resisting Dead Load	2.0	total width		2.0	total area	
	(e.g. Roof, Upper Floor, Main Floor)	Tributary Width (Lower Floor)			Tributary Area (Lower Floor)		
9.50 ft	Total Length of Shearwalls	1.0	tributary width		1.0	tributary area	
		2.0	total width		2.0	total area	

V(from upper)=	3784 lb	17281 lb	Height of Shearwall =	9.0 ft	Weight of Shearwall =	10.0 lbs
V(from main)=	0 lb	0 lb	Length of Shearwall =	3.3 ft	Tributary width for dead load =	1.0 ft
V(from lower)=	0 lb	0 lb	Aspect Ratio OK		Length of adjoining wall =	1.0 ft
Σ (Wind) =	3,784 lb	Σ (Smc) = 17,281 lb	Use alternate R factor for seismic?	No		
v =	88 PLF	v = 400 PLF				

3x framing required per IBC

SDPWS, Table 4.3A → (2w/h) x 0.93 x 595 = 406 PLF → USE SW2

Seismic controls shearwall design

C_{TOTAL} =	(floor above) + (this floor) =		+ 2521 lbs	= 2521 lbs	Seismic controls	
T_{TOTAL} =	(floor above) + (this floor) =		+ 3478 lbs	= 3478 lbs	Load case 8 controls - Seismic	

Seismic controls holdown design

Where overstrength factor is applicable, use this value for E in equations 5, 6, and 8: E= 3602 lbs

USE SIMPSON DESIGNED HOLDOWN: MST60

OR AT FOUNDATION / INTERIOR WALLS USE: STHD14/RJ

UPPER FL. LEFT (BDRM 3, M. BATH)

SHEARWALL | WIND | SEISMIC

Floor Info

Upper	Floor Level, e.g. Upper, Main, Lower	Tributary Width (Upper Floor)			Tributary Area (Upper Floor)		
Ft-Rr	Load Direction, e.g. Left-Right, Front-Rear	6.0	tributary width		6.0	tributary area	
	(For Left Wall, Use Front-Rear Load Direction)	45.0	total width		45.0	total area	
CDX	Sheathing type	Tributary Width (Main Floor)			Tributary Area (Main Floor)		
	Values in accordance with AF&PA SDPWS-2015	1.0	tributary width		1.0	tributary area	
Roof	Resisting Dead Load	2.0	total width		2.0	total area	
	(e.g. Roof, Upper Floor, Main Floor)	Tributary Width (Lower Floor)			Tributary Area (Lower Floor)		
23.50 ft	Total Length of Shearwalls	1.0	tributary width		1.0	tributary area	
		2.0	total width		2.0	total area	

V(from upper)=	3307 lb	17281 lb	Height of Shearwall =	9.0 ft	Weight of Shearwall =	10.0 lbs
V(from main)=	0 lb	0 lb	Length of Shearwall =	3.0 ft	Tributary width for dead load =	1.0 ft
V(from lower)=	0 lb	0 lb	Aspect Ratio OK		Length of adjoining wall =	1.0 ft
Σ (Wind) =	3,307 lb	Σ (Smc) = 17,281 lb	Use alternate R factor for seismic?	No		
v =	19 PLF	v = 98 PLF				

SDPWS, Table 4.3A → (2w/h) x 0.93 x 242 = 150 PLF → USE SW6

Seismic controls shearwall design

C_{TOTAL} =	(floor above) + (this floor) =		+ 618 lbs	= 618 lbs	Seismic controls	
T_{TOTAL} =	(floor above) + (this floor) =		+ 766 lbs	= 766 lbs	Load case 8 controls - Seismic	

Seismic controls holdown design

Where overstrength factor is applicable, use this value for E in equations 5, 6, and 8: E= 882 lbs

USE SIMPSON DESIGNED HOLDOWN: CS14

OR AT FOUNDATION / INTERIOR WALLS USE: LSTHD8/RJ

UPPER FL. MID 2 (ATTIC, M. SUITE)

SHEARWALL | WIND | SEISMIC

Floor Info

Upper	Floor Level, e.g. Upper, Main, Lower	Tributary Width (Upper Floor)			Tributary Area (Upper Floor)		
Ft-Rr	Load Direction, e.g. Left-Right, Front-Rear	17.0	tributary width		17.0	tributary area	
	(For Left Wall, Use Front-Rear Load Direction)	45.0	total width		45.0	total area	
CDX	Sheathing type	Tributary Width (Main Floor)			Tributary Area (Main Floor)		
	Values in accordance with AF&PA SDPWS-2015	1.0	tributary width		1.0	tributary area	
Roof	Resisting Dead Load	2.0	total width		2.0	total area	
	(e.g. Roof, Upper Floor, Main Floor)	Tributary Width (Lower Floor)			Tributary Area (Lower Floor)		
23.00 ft	Total Length of Shearwalls	1.0	tributary width		1.0	tributary area	
		2.0	total width		2.0	total area	

V(from upper)=	3307 lb	17281 lb	Height of Shearwall =	9.0 ft	Weight of Shearwall =	10.0 lbs
V(from main)=	0 lb	0 lb	Length of Shearwall =	8.0 ft	Tributary width for dead load =	1.0 ft
V(from lower)=	0 lb	0 lb	Aspect Ratio OK		Length of adjoining wall =	1.0 ft
Σ (Wind) =	3,307 lb	Σ (Smc) = 17,281 lb	Use alternate R factor for seismic?	No		
v =	54 PLF	v = 284 PLF				

SDPWS, Table 4.3A → 0.93 x 353 = 328 PLF → USE SW4

Seismic controls shearwall design

C_{TOTAL} =	(floor above) + (this floor) =		+ 1788 lbs	= 1788 lbs	Seismic controls	
T_{TOTAL} =	(floor above) + (this floor) =		+ 2322 lbs	= 2322 lbs	Load case 8 controls - Seismic	

Seismic controls holdown design

Where overstrength factor is applicable, use this value for E in equations 5, 6, and 8: E= 2555 lbs

USE SIMPSON DESIGNED HOLDOWN: CS14

OR AT FOUNDATION / INTERIOR WALLS USE: STHD10/RJ

UPPER FL. RIGHT (ATTIC)

SHEARWALL | WIND | SEISMIC

Floor Info

		WIND	SEISMIC
Upper	Floor Level, e.g. Upper, Main, Lower	Tributary Width (Upper Floor): 8.0 tributary width, 45.0 total width	Tributary Area (Upper Floor): 8.0 tributary area, 45.0 total area
Ft-Rr	Load Direction, e.g. Left-Right, Front-Rear (For Left Wall, Use Front-Rear Load Direction)		
CDX	Sheathing type	Tributary Width (Main Floor): 1.0 tributary width, 2.0 total width	Tributary Area (Main Floor): 1.0 tributary area, 2.0 total area
	Values in accordance with AF&PA SDPWS-2015		
Roof	Resisting Dead Load (e.g. Roof, Upper Floor, Main Floor)	Tributary Width (Lower Floor): 1.0 tributary width, 2.0 total width	Tributary Area (Lower Floor): 1.0 tributary area, 2.0 total area
8.00 ft	Total Length of Shearwalls		

V(from upper)=	3307 lb	17281 lb	Height of Shearwall =	9.0 ft	Weight of Shearwall =	10.0 lbs
V(from main)=	0 lb	0 lb	Length of Shearwall =	8.0 ft	Tributary width for dead load =	1.0 ft
V(from lower)=	0 lb	0 lb	Aspect Ratio OK		Length of adjoining wall =	1.0 ft
Σ (Wind) =	3,307 lb	Σ (Smc) = 17,281 lb	Use alternate R factor for seismic?	No		
v =	73 PLF	v = 384 PLF				

3x framing required per IBC

SDPWS, Table 4.3A → 0.93 x 456 = 424 PLF → USE SW3

Seismic controls shearwall design

C_{TOTAL} =	(floor above) + (this floor) =		+ 2419 lbs	= 2419 lbs	Seismic controls	
T_{TOTAL} =	(floor above) + (this floor) =		+ 3224 lbs	= 3224 lbs	Load case 8 controls - Seismic	

Wind controls holdown design

Where overstrength factor is applicable, use this value for E in equations 5, 6, and 8: E= 3456 lbs

USE SIMPSON DESIGNED HOLDOWN: MST48

OR AT FOUNDATION / INTERIOR WALLS USE: STHD14/RJ

UPPER FL. MID 1 (WIC)

SHEARWALL | WIND | SEISMIC

Floor Info

		WIND	SEISMIC
Upper	Floor Level, e.g. Upper, Main, Lower	Tributary Width (Upper Floor): 15.0 tributary width, 45.0 total width	Tributary Area (Upper Floor): 15.0 tributary area, 45.0 total area
Ft-Rr	Load Direction, e.g. Left-Right, Front-Rear (For Left Wall, Use Front-Rear Load Direction)		
CDX	Sheathing type	Tributary Width (Main Floor): 1.0 tributary width, 2.0 total width	Tributary Area (Main Floor): 1.0 tributary area, 2.0 total area
	Values in accordance with AF&PA SDPWS-2015		
Roof	Resisting Dead Load (e.g. Roof, Upper Floor, Main Floor)	Tributary Width (Lower Floor): 1.0 tributary width, 2.0 total width	Tributary Area (Lower Floor): 1.0 tributary area, 2.0 total area
12.00 ft	Total Length of Shearwalls		

V(from upper)=	3307 lb	17281 lb	Height of Shearwall =	9.0 ft	Weight of Shearwall =	10.0 lbs
V(from main)=	0 lb	0 lb	Length of Shearwall =	12.0 ft	Tributary width for dead load =	1.0 ft
V(from lower)=	0 lb	0 lb	Aspect Ratio OK		Length of adjoining wall =	1.0 ft
Σ (Wind) =	3,307 lb	Σ (Smc) = 17,281 lb	Use alternate R factor for seismic?	No		
v =	92 PLF	v = 480 PLF				

3x framing required per IBC

SDPWS, Table 4.3A → 0.93 x 595 = 553 PLF → USE SW2

Seismic controls shearwall design

C_{TOTAL} =	(floor above) + (this floor) =		+ 3024 lbs	= 3024 lbs	Seismic controls	
T_{TOTAL} =	(floor above) + (this floor) =		+ 3995 lbs	= 3995 lbs	Load case 8 controls - Seismic	

Seismic controls holdown design

Where overstrength factor is applicable, use this value for E in equations 5, 6, and 8: E= 4320 lbs

USE SIMPSON DESIGNED HOLDOWN: MST60

OR AT FOUNDATION / INTERIOR WALLS USE: HDU8-SDS2.5

MAIN FL. REAR (KITCHEN)

SHEARWALL | WIND | SEISMIC

Floor Info

		WIND	SEISMIC
Main	Floor Level, e.g. Upper, Main, Lower	Tributary Width (Upper Floor): 9.0 tributary width, 50.0 total width	Tributary Area (Upper Floor): 9.0 tributary area, 50.0 total area
Lt-Rt	Load Direction, e.g. Left-Right, Front-Rear (For Left Wall, Use Front-Rear Load Direction)		
CDX	Sheathing type	Tributary Width (Main Floor): 8.5 tributary width, 50.0 total width	Tributary Area (Main Floor): 8.5 tributary area, 50.0 total area
	Values in accordance with AF&PA SDPWS-2015		
U/FL	Resisting Dead Load (e.g. Roof, Upper Floor, Main Floor)	Tributary Width (Lower Floor): 1.0 tributary width, 2.0 total width	Tributary Area (Lower Floor): 1.0 tributary area, 2.0 total area
5.50 ft	Total Length of Shearwalls		

V(from upper)=	3784 lb	17281 lb	Height of Shearwall =	9.0 ft	Weight of Shearwall =	10.0 lbs
V(from main)=	6623 lb	12564 lb	Length of Shearwall =	5.5 ft	Tributary width for dead load =	6.0 ft
V(from lower)=	0 lb	0 lb	Aspect Ratio OK		Length of adjoining wall =	2.0 ft
Σ (Wind) =	10,407 lb	Σ (Smc) = 29,845 lb	Use alternate R factor for seismic?	No		
v =	329 PLF	v = 954 PLF				

3x framing required per IBC

SDPWS, Table 4.3A → 0.93 x 1190 = 1107 PLF → USE (2)SW2

Seismic controls shearwall design

C_{TOTAL} =	(floor above) + (this floor) =	3563	+ 6010 lbs	= 9573 lbs	Seismic controls	
T_{TOTAL} =	(floor above) + (this floor) =	4691	+ 8206 lbs	= 12897 lbs	Load case 8 controls - Seismic	

Seismic controls holdown design

Where overstrength factor is applicable, use this value for E in equations 5, 6, and 8: E= 8585 lbs

USE SIMPSON DESIGNED HOLDOWN: HD19 w/DF

OR AT FOUNDATION / INTERIOR WALLS USE: HHDQ14-SDS2.5

MAIN FL. MID 1 (DECK)

SHEARWALL | WIND | SEISMIC

Floor Info

Main	Floor Level, e.g. Upper, Main, Lower		Tributary Width (Upper Floor)		Tributary Area (Upper Floor)	
Lt-Rt	Load Direction, e.g. Left-Right, Front-Rear		14.5	tributary width	14.5	tributary area
	(For Left Wall, Use Front-Rear Load Direction)		50.0	total width	50.0	total area
CDX	Sheathing type		Tributary Width (Main Floor)		Tributary Area (Main Floor)	
	Values in accordance with AF&PA SDPWS-2015		14.5	tributary width	14.5	tributary area
U/FL	Resisting Dead Load		50.0	total width	50.0	total area
	(e.g. Roof, Upper Floor, Main Floor)		Tributary Width (Lower Floor)		Tributary Area (Lower Floor)	
11.50 ft	Total Length of Shearwalls		1.0	tributary width	1.0	tributary area
			2.0	total width	2.0	total area

V(from upper)=	3784 lb	17281 lb	Height of Shearwall =	9.0 ft	Weight of Shearwall =	10.0 lbs
V(from main)=	6623 lb	12564 lb	Length of Shearwall =	11.5 ft	Tributary width for dead load =	1.0 ft
V(from lower)=	0 lb	0 lb			Length of adjoining wall =	1.0 ft
Σ (Wind) =	10,407 lb	Σ (Smc) = 29,845 lb	Use alternate R factor for seismic?	No		
v =	262 PLF	v = 753 PLF				

3x framing required per IBC

SDPWS, Table 4.3A → 0.93 x 911 = 847 PLF → USE (2)SW3

Seismic controls shearwall design

C_{TOTAL} =	(floor above) + (this floor) =	2339	+	4741 lbs	=	7080 lbs	Seismic controls
T_{TOTAL} =	(floor above) + (this floor) =	3220	+	6459 lbs	=	9679 lbs	Load case 8 controls - Seismic

Seismic controls holdown design

HDU14

Where overstrength factor is applicable, use this value for E in equations 5, 6, and 8: E= 6774 lbs

USE SIMPSON DESIGNED HOLDOWN: HD19 w/DF

OR AT FOUNDATION / INTERIOR WALLS USE: HHDQ14-SDS2.5

MAIN FL. MID 2 (DECK)

SHEARWALL | WIND | SEISMIC

Floor Info

Main	Floor Level, e.g. Upper, Main, Lower		Tributary Width (Upper Floor)		Tributary Area (Upper Floor)	
Lt-Rt	Load Direction, e.g. Left-Right, Front-Rear		14.0	tributary width	14.0	tributary area
	(For Left Wall, Use Front-Rear Load Direction)		50.0	total width	50.0	total area
CDX	Sheathing type		Tributary Width (Main Floor)		Tributary Area (Main Floor)	
	Values in accordance with AF&PA SDPWS-2015		14.0	tributary width	14.0	tributary area
U/FL	Resisting Dead Load		50.0	total width	50.0	total area
	(e.g. Roof, Upper Floor, Main Floor)		Tributary Width (Lower Floor)		Tributary Area (Lower Floor)	
9.00 ft	Total Length of Shearwalls		1.0	tributary width	1.0	tributary area
			2.0	total width	2.0	total area

V(from upper)=	3784 lb	17281 lb	Height of Shearwall =	9.0 ft	Weight of Shearwall =	10.0 lbs
V(from main)=	6623 lb	12564 lb	Length of Shearwall =	9.0 ft	Tributary width for dead load =	1.0 ft
V(from lower)=	0 lb	0 lb	Aspect Ratio OK		Length of adjoining wall =	1.0 ft
Σ (Wind) =	10,407 lb	Σ (Smc) = 29,845 lb	Use alternate R factor for seismic?	No		
v =	324 PLF	v = 929 PLF				

3x framing required per IBC

SDPWS, Table 4.3A → 0.93 x 1190 = 1107 PLF → USE (2)SW2

Seismic controls shearwall design

C_{TOTAL} =	(floor above) + (this floor) =	3387	+	5850 lbs	=	9237 lbs	Seismic controls
T_{TOTAL} =	(floor above) + (this floor) =	4583	+	8101 lbs	=	12684 lbs	Load case 8 controls - Seismic

Seismic controls holdown design

HDU14

Where overstrength factor is applicable, use this value for E in equations 5, 6, and 8: E= 8357 lbs

USE SIMPSON DESIGNED HOLDOWN: HD19 w/DF

OR AT FOUNDATION / INTERIOR WALLS USE: HHDQ14-SDS2.5

MAIN FL. FRONT (FOYER, GREAT RM)

SHEARWALL | WIND | SEISMIC

Floor Info

Main	Floor Level, e.g. Upper, Main, Lower		Tributary Width (Upper Floor)		Tributary Area (Upper Floor)	
Lt-Rt	Load Direction, e.g. Left-Right, Front-Rear		11.0	tributary width	11.0	tributary area
	(For Left Wall, Use Front-Rear Load Direction)		50.0	total width	50.0	total area
CDX	Sheathing type		Tributary Width (Main Floor)		Tributary Area (Main Floor)	
	Values in accordance with AF&PA SDPWS-2015		11.0	tributary width	11.0	tributary area
U/FL	Resisting Dead Load		50.0	total width	50.0	total area
	(e.g. Roof, Upper Floor, Main Floor)		Tributary Width (Lower Floor)		Tributary Area (Lower Floor)	
10.50 ft	Total Length of Shearwalls		1.0	tributary width	1.0	tributary area
			2.0	total width	2.0	total area

V(from upper)=	3784 lb	17281 lb	Height of Shearwall =	9.0 ft	Weight of Shearwall =	10.0 lbs
V(from main)=	6623 lb	12564 lb	Length of Shearwall =	3.0 ft	Tributary width for dead load =	1.0 ft
V(from lower)=	0 lb	0 lb	Aspect Ratio OK		Length of adjoining wall =	1.0 ft
Σ (Wind) =	10,407 lb	Σ (Smc) = 29,845 lb	Use alternate R factor for seismic?	No		
v =	218 PLF	v = 625 PLF				

3x framing required per IBC

SDPWS, Table 4.3A → (2w/h) x 0.93 x 1190 = 738 PLF → USE (2)SW2

Seismic controls shearwall design

C_{TOTAL} =	(floor above) + (this floor) =	2521	+	3940 lbs	=	6461 lbs	Seismic controls
T_{TOTAL} =	(floor above) + (this floor) =	3478	+	5512 lbs	=	8990 lbs	Load case 8 controls - Seismic

Seismic controls holdown design

Where overstrength factor is applicable, use this value for E in equations 5, 6, and 8: E= 5628 lbs

USE SIMPSON DESIGNED HOLDOWN: HDU11-SDS2.5

MAIN FL. LEFT (GUEST, LAUND., KITCHEN)

SHEARWALL

Floor Info

Main	Floor Level, e.g. Upper, Main, Lower		WIND	Tributary Width (Upper Floor)		SEISMIC	Tributary Area (Upper Floor)
Ft-Rr	Load Direction, e.g. Left-Right, Front-Rear			6.0 tributary width			6.0 tributary area
	(For Left Wall, Use Front-Rear Load Direction)			45.0 total width			45.0 total area
CDX	Sheathing type			Tributary Width (Main Floor)			Tributary Area (Main Floor)
	Values in accordance with AF&PA SDPWS-2015			6.0 tributary width			6.0 tributary area
U/FL	Resisting Dead Load			45.0 total width			45.0 total area
	(e.g. Roof, Upper Floor, Main Floor)			Tributary Width (Lower Floor)			Tributary Area (Lower Floor)
14.00 ft	Total Length of Shearwalls			1.0 tributary width			1.0 tributary area
				2.0 total width			2.0 total area

V(from upper)=	3307 lb	17281 lb		Height of Shearwall =	9.0 ft	Weight of Shearwall =	10.0 lbs
V(from main)=	5788 lb	12564 lb		Length of Shearwall =	7.0 ft	Tributary width for dead load =	1.0 ft
V(from lower)=	0 lb	0 lb		Aspect Ratio OK		Length of adjoining wall =	1.0 ft
Σ (Wind) =	9,095 lb	Σ (Smc) = 29,845 lb		Use alternate R factor for seismic?	No		
v =	87 PLF	v = 284 PLF					

SDPWS, Table 4.3A → 0.93 x 353 = 328 PLF → USE SW4

Seismic controls shearwall design

C_{TOTAL} =	(floor above) + (this floor) =	618	+	1791 lbs	=	2409 lbs	Seismic controls
T_{TOTAL} =	(floor above) + (this floor) =	766	+	2349 lbs	=	3115 lbs	Load case 8 controls - Seismic

Seismic controls holdown design

Where overstrength factor is applicable, use this value for E in equations 5, 6, and 8: E= 2558 lbs

USE SIMPSON DESIGNED HOLDOWN: MST48

OR AT FOUNDATION / INTERIOR WALLS USE: STHD14/RJ

MAIN FL MID 1 (DECK)

SHEARWALL

Floor Info

Main	Floor Level, e.g. Upper, Main, Lower		WIND	Tributary Width (Upper Floor)		SEISMIC	Tributary Area (Upper Floor)
Ft-Rr	Load Direction, e.g. Left-Right, Front-Rear			15.0 tributary width			15.0 tributary area
	(For Left Wall, Use Front-Rear Load Direction)			45.0 total width			45.0 total area
CDX	Sheathing type			Tributary Width (Main Floor)			Tributary Area (Main Floor)
	Values in accordance with AF&PA SDPWS-2015			15.0 tributary width			15.0 tributary area
U/FL	Resisting Dead Load			45.0 total width			45.0 total area
	(e.g. Roof, Upper Floor, Main Floor)			Tributary Width (Lower Floor)			Tributary Area (Lower Floor)
12.00 ft	Total Length of Shearwalls			1.0 tributary width			1.0 tributary area
				2.0 total width			2.0 total area

V(from upper)=	3307 lb	17281 lb		Height of Shearwall =	9.0 ft	Weight of Shearwall =	10.0 lbs
V(from main)=	5788 lb	12564 lb		Length of Shearwall =	12.0 ft	Tributary width for dead load =	1.0 ft
V(from lower)=	0 lb	0 lb		Aspect Ratio OK		Length of adjoining wall =	1.0 ft
Σ (Wind) =	9,095 lb	Σ (Smc) = 29,845 lb		Use alternate R factor for seismic?	No		
v =	253 PLF	v = 829 PLF					

3x framing required per IBC

SDPWS, Table 4.3A → 0.93 x 911 = 847 PLF → USE (2)SW3

Seismic controls shearwall design

C_{TOTAL} =	(floor above) + (this floor) =	3024	+	5223 lbs	=	8247 lbs	Seismic controls
T_{TOTAL} =	(floor above) + (this floor) =	3995	+	7136 lbs	=	11131 lbs	Load case 8 controls - Seismic

Seismic controls holdown design

HDU14

Where overstrength factor is applicable, use this value for E in equations 5, 6, and 8: E= 7461 lbs

USE SIMPSON DESIGNED HOLDOWN: HD19 w/DF

OR AT FOUNDATION / INTERIOR WALLS USE: HHDQ14-SDS2.5

MAIN FL. MID 2 (FOYER, HALLWAY)

SHEARWALL

Floor Info

Main	Floor Level, e.g. Upper, Main, Lower		WIND	Tributary Width (Upper Floor)		SEISMIC	Tributary Area (Upper Floor)
Ft-Rr	Load Direction, e.g. Left-Right, Front-Rear			17.0 tributary width			17.0 tributary area
	(For Left Wall, Use Front-Rear Load Direction)			45.0 total width			45.0 total area
CDX	Sheathing type			Tributary Width (Main Floor)			Tributary Area (Main Floor)
	Values in accordance with AF&PA SDPWS-2015			17.0 tributary width			17.0 tributary area
U/FL	Resisting Dead Load			45.0 total width			45.0 total area
	(e.g. Roof, Upper Floor, Main Floor)			Tributary Width (Lower Floor)			Tributary Area (Lower Floor)
12.00 ft	Total Length of Shearwalls			1.0 tributary width			1.0 tributary area
				2.0 total width			2.0 total area

V(from upper)=	3307 lb	17281 lb		Height of Shearwall =	9.0 ft	Weight of Shearwall =	10.0 lbs
V(from main)=	5788 lb	12564 lb		Length of Shearwall =	5.0 ft	Tributary width for dead load =	1.0 ft
V(from lower)=	0 lb	0 lb		Aspect Ratio OK		Length of adjoining wall =	1.0 ft
Σ (Wind) =	9,095 lb	Σ (Smc) = 29,845 lb		Use alternate R factor for seismic?	No		
v =	286 PLF	v = 940 PLF					

3x framing required per IBC

SDPWS, Table 4.3A → 0.93 x 1190 = 1107 PLF → USE (2)SW2

Seismic controls shearwall design

C_{TOTAL} =	(floor above) + (this floor) =	1788	+	5919 lbs	=	7707 lbs	Seismic controls
T_{TOTAL} =	(floor above) + (this floor) =	2322	+	8293 lbs	=	10615 lbs	Load case 8 controls - Seismic

Seismic controls holdown design

(2) MST72

Where overstrength factor is applicable, use this value for E in equations 5, 6, and 8: E= 8456 lbs

USE SIMPSON DESIGNED HOLDOWN: HD19 w/DF

OR AT FOUNDATION / INTERIOR WALLS USE: HHDQ14-SDS2.5

MAIN FL. RIGHT (GREAT RM)

SHEARWALL | WIND | SEISMIC

Floor Info

Main	Floor Level, e.g. Upper, Main, Lower	Tributary Width (Upper Floor)			Tributary Area (Upper Floor)		
Ft-Rr	Load Direction, e.g. Left-Right, Front-Rear	8.0	tributary width		8.0	tributary area	
	(For Left Wall, Use Front-Rear Load Direction)	45.0	total width		45.0	total area	
CDX	Sheathing type	Tributary Width (Main Floor)			Tributary Area (Main Floor)		
	Values in accordance with AF&PA SDPWS-2015	8.0	tributary width		8.0	tributary area	
U/FL	Resisting Dead Load	45.0	total width		45.0	total area	
	(e.g. Roof, Upper Floor, Main Floor)	Tributary Width (Lower Floor)			Tributary Area (Lower Floor)		
4.00 ft	Total Length of Shearwalls	1.0	tributary width		1.0	tributary area	
		2.0	total width		2.0	total area	

V(from upper)=	3307 lb	17281 lb		Height of Shearwall =	12.0 ft	Weight of Shearwall =	10.0 lbs
V(from main)=	5788 lb	12564 lb		Length of Shearwall =	2.0 ft	Tributary width for dead load =	1.0 ft
V(from lower)=	0 lb	0 lb		Warning! Height to Width Ratio!		Length of adjoining wall =	1.0 ft
Σ (Wind) =	9,095 lb	Σ (Smc) =	29,845 lb	Use alternate R factor for seismic?	No		
v =	404 PLF	v =	1326 PLF				

3x framing required per IBC

SDPWS, Table 4.3A → (2w/h) x 0.93 x 1432 = 444 PLF → USE 10d@2"o/c

USE SIMPSON WSW24x12

Sucka! You'd better bust out your Simpson Catalog!

Seismic controls shearwall design

C_{TOTAL} =	(floor above) + (this floor) =	2419	+	11142 lbs	=	13561 lbs	Seismic controls
T_{TOTAL} =	(floor above) + (this floor) =	3224	+	15798 lbs	=	19022 lbs	Load case 8 controls - Seismic

Seismic controls holdown design

USE WSW-AB1x36HS

USE SIMPSON DESIGNED HOLDOWN: TOO BIG!!

Where overstrength factor is applicable, use this value for E in equations 5, 6, and 8: E= 15917 lbs

LOWER FL. REAR (CRAWLSPACE, GARAGE)

SHEARWALL | WIND | SEISMIC

Floor Info

Lower	Floor Level, e.g. Upper, Main, Lower	Tributary Width (Upper Floor)			Tributary Area (Upper Floor)		
Lt-Rt	Load Direction, e.g. Left-Right, Front-Rear	9.0	tributary width		9.0	tributary area	
	(For Left Wall, Use Front-Rear Load Direction)	50.0	total width		50.0	total area	
CDX	Sheathing type	Tributary Width (Main Floor)			Tributary Area (Main Floor)		
	Values in accordance with AF&PA SDPWS-2015	8.5	tributary width		8.5	tributary area	
M/FL	Resisting Dead Load	50.0	total width		50.0	total area	
	(e.g. Roof, Upper Floor, Main Floor)	Tributary Width (Lower Floor)			Tributary Area (Lower Floor)		
31.00 ft	Total Length of Shearwalls	8.5	tributary width		8.5	tributary area	
		50.0	total width		50.0	total area	

V(from upper)=	3784 lb	17281 lb		Height of Shearwall =	9.0 ft	Weight of Shearwall =	10.0 lbs
V(from main)=	6623 lb	12564 lb		Length of Shearwall =	3.0 ft	Tributary width for dead load =	1.0 ft
V(from lower)=	4925 lb	4742 lb		Aspect Ratio OK		Length of adjoining wall =	1.0 ft
Σ (Wind) =	15,331 lb	Σ (Smc) =	34,587 lb	Use alternate R factor for seismic?	No		
v =	85 PLF	v =	195 PLF				

SDPWS, Table 4.3A → (2w/h) x 0.93 x 353 = 219 PLF → USE SW4

Seismic controls shearwall design

C_{TOTAL} =	(floor above) + (this floor) =		+	1230 lbs	=	1230 lbs	Seismic controls
T_{TOTAL} =	(floor above) + (this floor) =		+	1641 lbs	=	1641 lbs	Load case 8 controls - Seismic

Seismic controls holdown design

USE SIMPSON DESIGNED HOLDOWN: CS14

OR AT FOUNDATION / INTERIOR WALLS USE: LSTHD8/RJ

Where overstrength factor is applicable, use this value for E in equations 5, 6, and 8: E= 1757 lbs

LOWER FL. MID (GARAGE)

SHEARWALL | WIND | SEISMIC

Floor Info

Lower	Floor Level, e.g. Upper, Main, Lower	Tributary Width (Upper Floor)			Tributary Area (Upper Floor)		
Ft-Rr	Load Direction, e.g. Left-Right, Front-Rear	17.0	tributary width		17.0	tributary area	
	(For Left Wall, Use Front-Rear Load Direction)	45.0	total width		45.0	total area	
CDX	Sheathing type	Tributary Width (Main Floor)			Tributary Area (Main Floor)		
	Values in accordance with AF&PA SDPWS-2015	17.0	tributary width		17.0	tributary area	
M/FL	Resisting Dead Load	45.0	total width		45.0	total area	
	(e.g. Roof, Upper Floor, Main Floor)	Tributary Width (Lower Floor)			Tributary Area (Lower Floor)		
30.00 ft	Total Length of Shearwalls	17.0	tributary width		17.0	tributary area	
		45.0	total width		45.0	total area	

V(from upper)=	3307 lb	17281 lb		Height of Shearwall =	9.0 ft	Weight of Shearwall =	10.0 lbs
V(from main)=	5788 lb	12564 lb		Length of Shearwall =	22.0 ft	Tributary width for dead load =	5.0 ft
V(from lower)=	4661 lb	4742 lb		Aspect Ratio OK		Length of adjoining wall =	1.0 ft
Σ (Wind) =	13,757 lb	Σ (Smc) =	34,587 lb	Use alternate R factor for seismic?	No		
v =	173 PLF	v =	436 PLF				

3x framing required per IBC

SDPWS, Table 4.3A → 0.93 x 595 = 553 PLF → USE SW2

Seismic controls shearwall design

C_{TOTAL} =	(floor above) + (this floor) =		+	2744 lbs	=	2744 lbs	Seismic controls
T_{TOTAL} =	(floor above) + (this floor) =		+	3042 lbs	=	3042 lbs	Load case 8 controls - Seismic

Seismic controls holdown design

USE SIMPSON DESIGNED HOLDOWN: MST48

OR AT FOUNDATION / INTERIOR WALLS USE: STHD14/RJ

Where overstrength factor is applicable, use this value for E in equations 5, 6, and 8: E= 3920 lbs

LOW. FL. MID (GARAGE) — SHEARWALL

Floor Info

Lower	Floor Level, e.g. Upper, Main, Lower
Lt-Rt	Load Direction, e.g. Left-Right, Front-Rear
	(For Left Wall, Use Front-Rear Load Direction)
CDX	Sheathing type
	Values in accordance with AF&PA SDPWS-2015
M/FL	Resisting Dead Load
	(e.g. Roof, Upper Floor, Main Floor)
27.00 ft	Total Length of Shearwalls

WIND

Tributary Width (Upper Floor)
14.5 tributary width
50.0 total width

Tributary Width (Main Floor)
14.5 tributary width
50.0 total width

Tributary Width (Lower Floor)
14.5 tributary width
50.0 total width

SEISMIC

Tributary Area (Upper Floor)
14.5 tributary area
50.0 total area

Tributary Area (Main Floor)
14.5 tributary area
50.0 total area

Tributary Area (Lower Floor)
14.5 tributary area
50.0 total area

V(from upper)=	3784 lb		17281 lb
V(from main)=	6623 lb		12564 lb
V(from lower)=	4925 lb		4742 lb
Σ (Wind) =	15,331 lb	Σ (Smc) =	34,587 lb
v **=**	165 PLF	***v*** **=**	371 PLF

Height of Shearwall = 9.0 ft
Length of Shearwall = 16.0 ft
Aspect Ratio OK
Use alternate R factor for seismic? No

Weight of Shearwall = 10.0 lbs
Tributary width for dead load = 1.0 ft
Length of adjoining wall = 1.0 ft

3x framing required per IBC

SDPWS, Table 4.3A → 0.93 x 456 = 424 PLF → USE SW3

Seismic controls shearwall design

C_{TOTAL} =	(floor above) + (this floor) =		+	2340 lbs	=	2340 lbs	Seismic controls
T_{TOTAL} =	(floor above) + (this floor) =		+	2925 lbs	=	2925 lbs	Load case 8 controls - Seismic

Seismic controls holdown design

Where overstrength factor is applicable, use this value for E in equations 5, 6, and 8: E= 3343 lbs

USE SIMPSON DESIGNED HOLDOWN: MST48
OR AT FOUNDATION / INTERIOR WALLS USE: STHD14/RJ

Project Title:
Engineer:
Project ID:
Project Descr:

Wood Beam

Project File: 23-043.ec6

LIC# : KW-06016495, Build:20.23.08.30 CK Engineering LLC (c) ENERCALC INC 1983-2023

DESCRIPTION: ROOF JOIST

CODE REFERENCES

Calculations per NDS 2018, IBC 2021, ASCE 7-16
Load Combination Set : IBC 2018

Material Properties

Analysis Method :	Allowable Stress Design	Fb +	2,600.0 psi	*E : Modulus of Elasticity*	
Load Combination	IBC 2018	Fb -	2,600.0 psi	Ebend- xx	1,900.0 ksi
		Fc - Prll	2,510.0 psi	Eminbend - xx	965.71 ksi
Wood Species :	iLevel Truss Joist	Fc - Perp	750.0 psi		
Wood Grade :	MicroLam LVL 1.9 E	Fv	285.0 psi		
		Ft	1,555.0 psi	Density	42.010 pcf
Beam Bracing :	Beam is Fully Braced against lateral-torsional buckling				

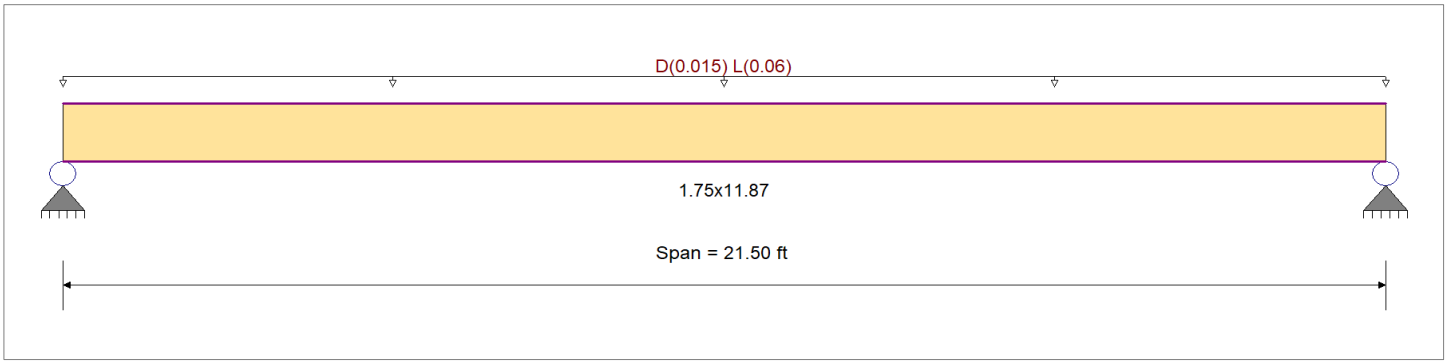

Applied Loads

Service loads entered. Load Factors will be applied for calculations.

Beam self weight calculated and added to loading
Uniform Load : D = 0.0150, L = 0.060 ksf, Tributary Width = 1.0 ft, (ROOF DECK)

DESIGN SUMMARY

Design OK

Maximum Bending Stress Ratio	=	0.525 : 1	Maximum Shear Stress Ratio	=	0.201 : 1
Section used for this span		1.75x11.87	Section used for this span		1.75x11.87
fb: Actual	=	1,366.58 psi	fv: Actual	=	57.39 psi
F'b	=	2,603.71 psi	F'v	=	285.00 psi
Load Combination		+D+L	Load Combination		+D+L
Location of maximum on span	=	10.750 ft	Location of maximum on span	=	20.558 ft
Span # where maximum occurs	=	Span # 1	Span # where maximum occurs	=	Span # 1

Maximum Deflection

Max Downward Transient Deflection	0.625 in	Ratio =	412 >=360	Span: 1 : L Only
Max Upward Transient Deflection	0 in	Ratio =	0 <360	n/a
Max Downward Total Deflection	0.845 in	Ratio =	305 >=240	Span: 1 : +D+L
Max Upward Total Deflection	0 in	Ratio =	0 <240	n/a

Maximum Forces & Stresses for Load Combinations

Load Combination / Segment Length	Span #	Max Stress Ratios M	V	CD	CM	C_t	CLx	C_F	Cfu	C_i	C_r	Moment Values M	fb	F'b	Shear Values V	fv	F'v
D Only														0.0	0.00	0.0	0.0
Length = 21.50 ft	1	0.152	0.058	0.90	1.00	1.00	1.00	1.001	1.00	1.00	1.00	1.22	355.1	2,343.3	0.21	14.9	256.5
+D+L					1.00	1.00	1.00	1.001	1.00	1.00	1.00			0.0	0.00	0.0	0.0
Length = 21.50 ft	1	0.525	0.201	1.00	1.00	1.00	1.00	1.001	1.00	1.00	1.00	4.68	1,366.6	2,603.7	0.80	57.4	285.0
+D+0.750L					1.00	1.00	1.00	1.001	1.00	1.00	1.00			0.0	0.00	0.0	0.0
Length = 21.50 ft	1	0.342	0.131	1.25	1.00	1.00	1.00	1.001	1.00	1.00	1.00	3.82	1,113.7	3,254.6	0.65	46.8	356.3
+0.60D					1.00	1.00	1.00	1.001	1.00	1.00	1.00			0.0	0.00	0.0	0.0
Length = 21.50 ft	1	0.051	0.020	1.60	1.00	1.00	1.00	1.001	1.00	1.00	1.00	0.73	213.0	4,165.9	0.12	8.9	456.0

Project Title:
Engineer:
Project ID:
Project Descr:

Wood Beam

Project File: 23-043.ec6

LIC# : KW-06016495, Build:20.23.08.30 CK Engineering LLC (c) ENERCALC INC 1983-2023

DESCRIPTION: ROOF JOIST

Overall Maximum Deflections

Load Combination	Span	Max. "-" Defl	Location in Span	Load Combination	Max. "+" Defl	Location in Span
+D+L	1	0.8448	10.828		0.0000	0.000

Maximum Deflections for Load Combinations

Load Combination	Span	Max. Downward Defl		Location in Span	Max. Upward Defl		Location in Span	
D Only	1	0.2195	in	10.828 ft	0.0000	in	0.000	ft
+D+L	1	0.8448	in	10.828 ft	0.0000	in	0.000	ft
+D+0.750L	1	0.6885	in	10.828 ft	0.0000	in	0.000	ft
+0.60D	1	0.1317	in	10.828 ft	0.0000	in	0.000	ft
L Only	1	0.6253	in	10.828 ft	0.0000	in	0.000	ft

Vertical Reactions

Support notation : Far left is #1 Values in KIPS

Load Combination	Support 1	Support 2
Max Upward from all Load Conditions	0.871	0.871
Max Upward from Load Combinations	0.871	0.871
Max Upward from Load Cases	0.645	0.645
D Only	0.226	0.226
+D+L	0.871	0.871
+D+0.750L	0.710	0.710
+0.60D	0.136	0.136
L Only	0.645	0.645

Project Title:
Engineer:
Project ID:
Project Descr:

Wood Beam

Project File: 23-043.ec6

LIC# : KW-06016495, Build:20.23.08.30 CK Engineering LLC (c) ENERCALC INC 1983-2023

DESCRIPTION: ROOF JOIST 2

CODE REFERENCES

Calculations per NDS 2018, IBC 2021, ASCE 7-16
Load Combination Set : IBC 2018

Material Properties

Analysis Method :	Allowable Stress Design	Fb +	2,600.0 psi	*E : Modulus of Elasticity*	
Load Combination	IBC 2018	Fb -	2,600.0 psi	Ebend- xx	1,900.0 ksi
		Fc - Prll	2,510.0 psi	Eminbend - xx	965.71 ksi
Wood Species :	iLevel Truss Joist	Fc - Perp	750.0 psi		
Wood Grade :	MicroLam LVL 1.9 E	Fv	285.0 psi		
		Ft	1,555.0 psi	Density	42.010 pcf
Beam Bracing :	Beam is Fully Braced against lateral-torsional buckling				

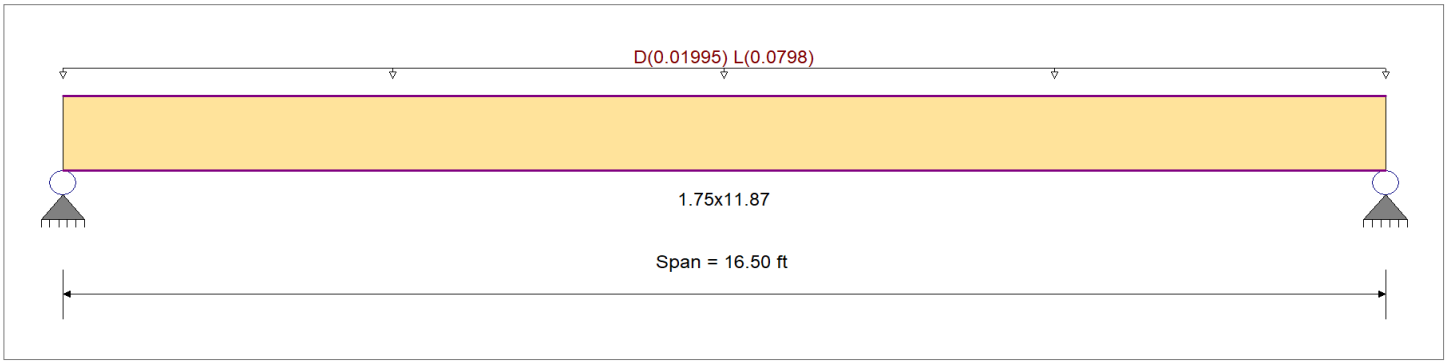

Applied Loads

Service loads entered. Load Factors will be applied for calculations.

Beam self weight calculated and added to loading
Uniform Load : D = 0.0150, L = 0.060 ksf, Tributary Width = 1.330 ft, (ROOF DECK)

DESIGN SUMMARY

Design OK

Maximum Bending Stress Ratio	=	0.404 : 1	Maximum Shear Stress Ratio	=	0.195 : 1
Section used for this span		1.75x11.87	Section used for this span		1.75x11.87
fb: Actual	=	1,050.61 psi	fv: Actual	=	55.65 psi
F'b	=	2,603.71 psi	F'v	=	285.00 psi
Load Combination		+D+L	Load Combination		+D+L
Location of maximum on span	=	8.250 ft	Location of maximum on span	=	0.000 ft
Span # where maximum occurs	=	Span # 1	Span # where maximum occurs	=	Span # 1

Maximum Deflection

Max Downward Transient Deflection	0.288 in	Ratio =	686 >=360	Span: 1 : L Only
Max Upward Transient Deflection	0 in	Ratio =	0 <360	n/a
Max Downward Total Deflection	0.383 in	Ratio =	517 >=240	Span: 1 : +D+L
Max Upward Total Deflection	0 in	Ratio =	0 <240	n/a

Maximum Forces & Stresses for Load Combinations

Load Combination		Max Stress Ratios										Moment Values			Shear Values		
Segment Length	Span #	M	V	CD	CM	C_t	CLx	C_F	Cfu	C_i	C_r	M	fb	F'b	V	fv	F'v
D Only														0.0	0.00	0.0	0.0
Length = 16.50 ft	1	0.110	0.053	0.90	1.00	1.00	1.00	1.001	1.00	1.00	1.00	0.89	258.3	2,343.3	0.19	13.7	256.5
+D+L					1.00	1.00	1.00	1.001	1.00	1.00	1.00			0.0	0.00	0.0	0.0
Length = 16.50 ft	1	0.404	0.195	1.00	1.00	1.00	1.00	1.001	1.00	1.00	1.00	3.60	1,050.6	2,603.7	0.77	55.7	285.0
+D+0.750L					1.00	1.00	1.00	1.001	1.00	1.00	1.00			0.0	0.00	0.0	0.0
Length = 16.50 ft	1	0.262	0.127	1.25	1.00	1.00	1.00	1.001	1.00	1.00	1.00	2.92	852.5	3,254.6	0.63	45.2	356.3
+0.60D					1.00	1.00	1.00	1.001	1.00	1.00	1.00			0.0	0.00	0.0	0.0
Length = 16.50 ft	1	0.037	0.018	1.60	1.00	1.00	1.00	1.001	1.00	1.00	1.00	0.53	155.0	4,165.9	0.11	8.2	456.0

Project Title:
Engineer:
Project ID:
Project Descr:

Wood Beam

Project File: 23-043.ec6

LIC# : KW-06016495, Build:20.23.08.30 CK Engineering LLC (c) ENERCALC INC 1983-2023

DESCRIPTION: ROOF JOIST 2

Overall Maximum Deflections

Load Combination	Span	Max. "-" Defl	Location in Span	Load Combination	Max. "+" Defl	Location in Span
+D+L	1	0.3825	8.310		0.0000	0.000

Maximum Deflections for Load Combinations

Load Combination	Span	Max. Downward Defl		Location in Span	Max. Upward Defl		Location in Span	
D Only	1	0.0940	in	8.310 ft	0.0000	in	0.000	ft
+D+L	1	0.3825	in	8.310 ft	0.0000	in	0.000	ft
+D+0.750L	1	0.3104	in	8.310 ft	0.0000	in	0.000	ft
+0.60D	1	0.0564	in	8.310 ft	0.0000	in	0.000	ft
L Only	1	0.2885	in	8.310 ft	0.0000	in	0.000	ft

Vertical Reactions

Support notation : Far left is #1 Values in KIPS

Load Combination	Support 1	Support 2
Max Upward from all Load Conditions	0.873	0.873
Max Upward from Load Combinations	0.873	0.873
Max Upward from Load Cases	0.658	0.658
D Only	0.215	0.215
+D+L	0.873	0.873
+D+0.750L	0.708	0.708
+0.60D	0.129	0.129
L Only	0.658	0.658

Project Title:
Engineer:
Project ID:
Project Descr:

Wood Beam

Project File: 23-043.ec6

LIC# : KW-06016495, Build:20.23.08.30 CK Engineering LLC (c) ENERCALC INC 1983-2023

DESCRIPTION: UPPER FL. DECK JOIST 1

CODE REFERENCES

Calculations per NDS 2018, IBC 2021, ASCE 7-16
Load Combination Set : IBC 2018

Material Properties

Analysis Method :	Allowable Stress Design	Fb +	675.0 psi	*E : Modulus of Elasticity*	
Load Combination	IBC 2018	Fb -	675.0 psi	Ebend- xx	1,100.0 ksi
		Fc - Prll	475.0 psi	Eminbend - xx	400.0 ksi
Wood Species :	Hem-Fir (North)	Fc - Perp	405.0 psi		
Wood Grade :	No.2	Fv	135.0 psi		
		Ft	325.0 psi	Density	28.720 pcf
Beam Bracing :	Beam is Fully Braced against lateral-torsional buckling				

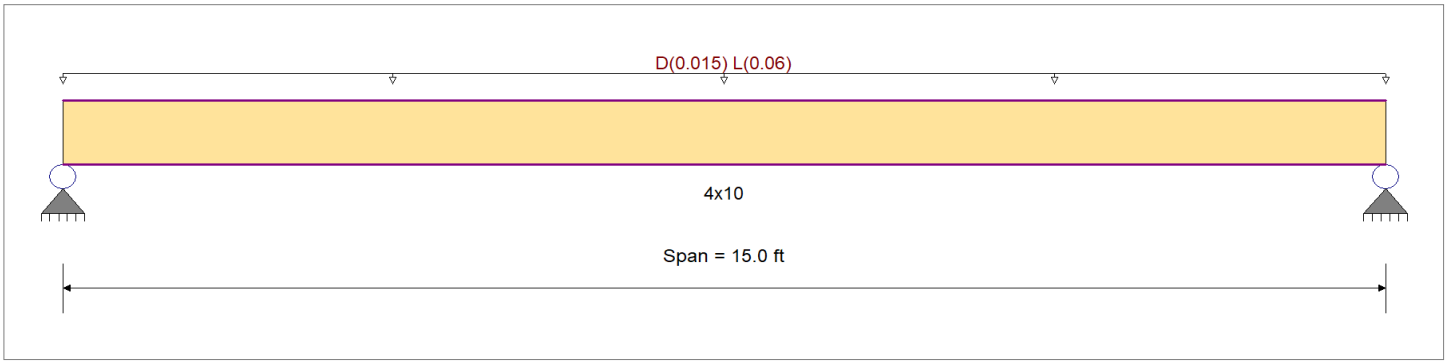

Applied Loads

Service loads entered. Load Factors will be applied for calculations.

Beam self weight calculated and added to loading
Uniform Load : D = 0.0150, L = 0.060 ksf, Tributary Width = 1.0 ft, (DECK)

DESIGN SUMMARY

Design OK

Maximum Bending Stress Ratio	=	0.850 : 1	Maximum Shear Stress Ratio	=	0.235 : 1
Section used for this span		4x10	Section used for this span		4x10
fb: Actual	=	550.81 psi	fv: Actual	=	25.41 psi
F'b	=	648.00 psi	F'v	=	108.00 psi
Load Combination		+D+L	Load Combination		+D+L
Location of maximum on span	=	7.500 ft	Location of maximum on span	=	14.234 ft
Span # where maximum occurs	=	Span # 1	Span # where maximum occurs	=	Span # 1

Maximum Deflection

Max Downward Transient Deflection	0.285 in	Ratio =	631 >=360	Span: 1 : L Only
Max Upward Transient Deflection	0 in	Ratio =	0 <360	n/a
Max Downward Total Deflection	0.387 in	Ratio =	465 >=240	Span: 1 : +D+L
Max Upward Total Deflection	0 in	Ratio =	0 <240	n/a

Maximum Forces & Stresses for Load Combinations

Load Combination		Max Stress Ratios										Moment Values			Shear Values		
Segment Length	Span #	M	V	CD	CM	C_t	CLx	C_F	Cfu	C_i	C_r	M	fb	F'b	V	fv	F'v
D Only														0.0	0.00	0.0	0.0
Length = 15.0 ft	1	0.249	0.069	0.90	1.00	1.00	1.00	1.200	1.00	0.80	1.00	0.60	145.1	583.2	0.14	6.7	97.2
+D+L					1.00	1.00	1.00	1.200	1.00	0.80	1.00			0.0	0.00	0.0	0.0
Length = 15.0 ft	1	0.850	0.235	1.00	1.00	1.00	1.00	1.200	1.00	0.80	1.00	2.29	550.8	648.0	0.55	25.4	108.0
+D+0.750L					1.00	1.00	1.00	1.200	1.00	0.80	1.00			0.0	0.00	0.0	0.0
Length = 15.0 ft	1	0.555	0.154	1.25	1.00	1.00	1.00	1.200	1.00	0.80	1.00	1.87	449.4	810.0	0.45	20.7	135.0
+0.60D					1.00	1.00	1.00	1.200	1.00	0.80	1.00			0.0	0.00	0.0	0.0
Length = 15.0 ft	1	0.084	0.023	1.60	1.00	1.00	1.00	1.200	1.00	0.80	1.00	0.36	87.1	1,036.8	0.09	4.0	172.8

Project Title:
Engineer:
Project ID:
Project Descr:

Wood Beam

Project File: 23-043.ec6

LIC# : KW-06016495, Build:20.23.08.30 CK Engineering LLC (c) ENERCALC INC 1983-2023

DESCRIPTION: UPPER FL. DECK JOIST 1

Overall Maximum Deflections

Load Combination	Span	Max. "-" Defl	Location in Span	Load Combination	Max. "+" Defl	Location in Span
+D+L	1	0.3869	7.555		0.0000	0.000

Maximum Deflections for Load Combinations

Load Combination	Span	Max. Downward Defl		Location in Span	Max. Upward Defl		Location in Span	
D Only	1	0.1019	in	7.555 ft	0.0000	in	0.000	ft
+D+L	1	0.3869	in	7.555 ft	0.0000	in	0.000	ft
+D+0.750L	1	0.3156	in	7.555 ft	0.0000	in	0.000	ft
+0.60D	1	0.0611	in	7.555 ft	0.0000	in	0.000	ft
L Only	1	0.2850	in	7.555 ft	0.0000	in	0.000	ft

Vertical Reactions

Support notation : Far left is #1 Values in KIPS

Load Combination	Support 1	Support 2
Max Upward from all Load Conditions	0.611	0.611
Max Upward from Load Combinations	0.611	0.611
Max Upward from Load Cases	0.450	0.450
D Only	0.161	0.161
+D+L	0.611	0.611
+D+0.750L	0.498	0.498
+0.60D	0.097	0.097
L Only	0.450	0.450

Project Title:
Engineer:
Project ID:
Project Descr:

Wood Beam

Project File: 23-043.ec6

LIC# : KW-06016495, Build:20.23.08.30 CK Engineering LLC (c) ENERCALC INC 1983-2023

DESCRIPTION: UPPER FL. DECK JOIST 2

CODE REFERENCES

Calculations per NDS 2018, IBC 2021, ASCE 7-16
Load Combination Set : IBC 2018

Material Properties

Analysis Method :	Allowable Stress Design	Fb +	675.0 psi	*E : Modulus of Elasticity*	
Load Combination	IBC 2018	Fb -	675.0 psi	Ebend- xx	1,100.0 ksi
		Fc - Prll	475.0 psi	Eminbend - xx	400.0 ksi
Wood Species :	Hem-Fir (North)	Fc - Perp	405.0 psi		
Wood Grade :	No.2	Fv	135.0 psi		
		Ft	325.0 psi	Density	28.720 pcf
Beam Bracing :	Beam is Fully Braced against lateral-torsional buckling				

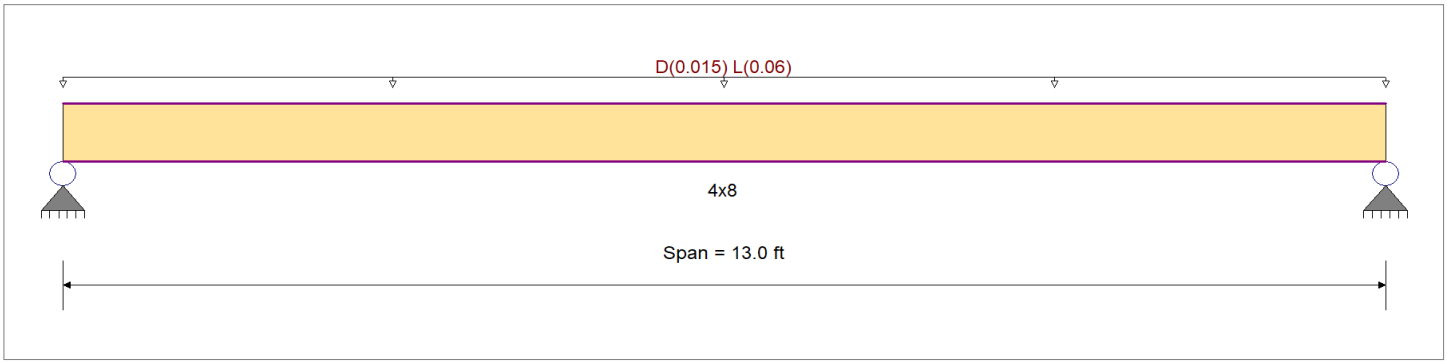

Applied Loads

Service loads entered. Load Factors will be applied for calculations.

Beam self weight calculated and added to loading
Uniform Load : D = 0.0150, L = 0.060 ksf, Tributary Width = 1.0 ft, (DECK JOIST)

DESIGN SUMMARY

Design OK

Maximum Bending Stress Ratio	=	0.943 : 1	Maximum Shear Stress Ratio	=	0.260 : 1
Section used for this span		4x8	Section used for this span		4x8
fb: Actual	=	661.92 psi	fv: Actual	=	28.07 psi
F'b	=	702.00 psi	F'v	=	108.00 psi
Load Combination		+D+L	Load Combination		+D+L
Location of maximum on span	=	6.500 ft	Location of maximum on span	=	12.431 ft
Span # where maximum occurs	=	Span # 1	Span # where maximum occurs	=	Span # 1

Maximum Deflection

Max Downward Transient Deflection	0.334 in	Ratio =	467 >=360	Span: 1 : L Only
Max Upward Transient Deflection	0 in	Ratio =	0 <360	n/a
Max Downward Total Deflection	0.446 in	Ratio =	350 >=240	Span: 1 : +D+L
Max Upward Total Deflection	0 in	Ratio =	0 <240	n/a

Maximum Forces & Stresses for Load Combinations

Load Combination		Max Stress Ratios										Moment Values			Shear Values		
Segment Length	Span #	M	V	CD	CM	C_t	CLx	C_F	Cfu	C_i	C_r	M	fb	F'b	V	fv	F'v
D Only														0.0	0.00	0.0	0.0
Length = 13.0 ft	1	0.263	0.072	0.90	1.00	1.00	1.00	1.300	1.00	0.80	1.00	0.42	165.9	631.8	0.12	7.0	97.2
+D+L					1.00	1.00	1.00	1.300	1.00	0.80	1.00			0.0	0.00	0.0	0.0
Length = 13.0 ft	1	0.943	0.260	1.00	1.00	1.00	1.00	1.300	1.00	0.80	1.00	1.69	661.9	702.0	0.47	28.1	108.0
+D+0.750L					1.00	1.00	1.00	1.300	1.00	0.80	1.00			0.0	0.00	0.0	0.0
Length = 13.0 ft	1	0.613	0.169	1.25	1.00	1.00	1.00	1.300	1.00	0.80	1.00	1.37	537.9	877.5	0.39	22.8	135.0
+0.60D					1.00	1.00	1.00	1.300	1.00	0.80	1.00			0.0	0.00	0.0	0.0
Length = 13.0 ft	1	0.089	0.024	1.60	1.00	1.00	1.00	1.300	1.00	0.80	1.00	0.25	99.5	1,123.2	0.07	4.2	172.8

Project Title:
Engineer:
Project ID:
Project Descr:

Wood Beam

Project File: 23-043.ec6

LIC# : KW-06016495, Build:20.23.08.30 CK Engineering LLC (c) ENERCALC INC 1983-2023

DESCRIPTION: UPPER FL. DECK JOIST 2

Overall Maximum Deflections

Load Combination	Span	Max. "-" Defl	Location in Span	Load Combination	Max. "+" Defl	Location in Span
+D+L	1	0.4455	6.547		0.0000	0.000

Maximum Deflections for Load Combinations

Load Combination	Span	Max. Downward Defl		Location in Span	Max. Upward Defl		Location in Span	
D Only	1	0.1116	in	6.547 ft	0.0000	in	0.000	ft
+D+L	1	0.4455	in	6.547 ft	0.0000	in	0.000	ft
+D+0.750L	1	0.3621	in	6.547 ft	0.0000	in	0.000	ft
+0.60D	1	0.0670	in	6.547 ft	0.0000	in	0.000	ft
L Only	1	0.3339	in	6.547 ft	0.0000	in	0.000	ft

Vertical Reactions

Support notation : Far left is #1 Values in KIPS

Load Combination	Support 1	Support 2
Max Upward from all Load Conditions	0.520	0.520
Max Upward from Load Combinations	0.520	0.520
Max Upward from Load Cases	0.390	0.390
D Only	0.130	0.130
+D+L	0.520	0.520
+D+0.750L	0.423	0.423
+0.60D	0.078	0.078
L Only	0.390	0.390

Project Title:
Engineer:
Project ID:
Project Descr:

Wood Beam

Project File: 23-043.ec6

LIC# : KW-06016495, Build:20.23.08.30 CK Engineering LLC (c) ENERCALC INC 1983-2023

DESCRIPTION: MAIN FL. DECK JOIST 1

CODE REFERENCES

Calculations per NDS 2018, IBC 2021, ASCE 7-16
Load Combination Set : IBC 2018

Material Properties

Analysis Method :	Allowable Stress Design	Fb +	675.0 psi	*E : Modulus of Elasticity*	
Load Combination	IBC 2018	Fb -	675.0 psi	Ebend- xx	1,100.0 ksi
		Fc - Prll	475.0 psi	Eminbend - xx	400.0 ksi
Wood Species :	Hem-Fir (North)	Fc - Perp	405.0 psi		
Wood Grade :	No.2	Fv	135.0 psi		
		Ft	325.0 psi	Density	28.720 pcf
Beam Bracing :	Beam is Fully Braced against lateral-torsional buckling			Repetitive Member Stress Increase	

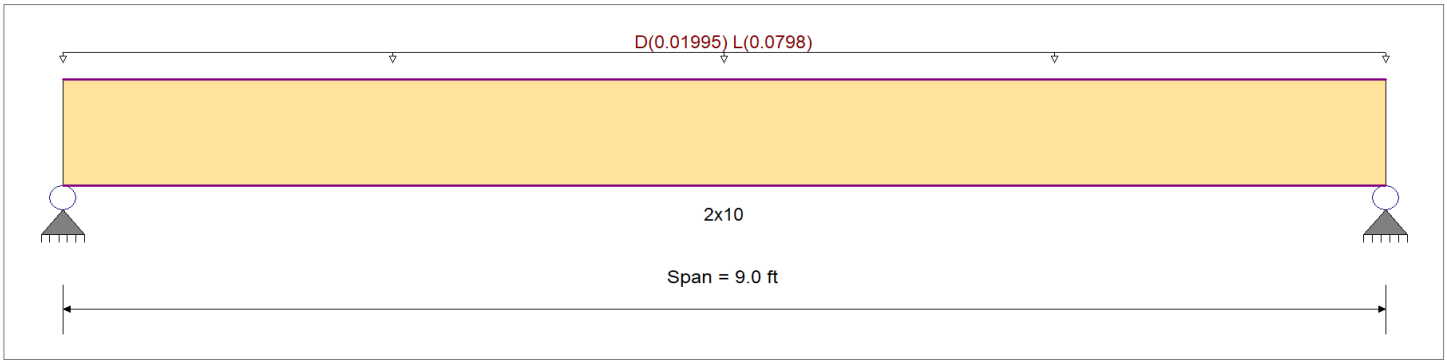

Applied Loads

Service loads entered. Load Factors will be applied for calculations.

Beam self weight calculated and added to loading
Uniform Load : D = 0.0150, L = 0.060 ksf, Tributary Width = 1.330 ft, (DECK JOIST)

DESIGN SUMMARY

Design OK

Maximum Bending Stress Ratio	=	0.852 : 1	Maximum Shear Stress Ratio	=	0.384 : 1
Section used for this span		2x10	Section used for this span		2x10
fb: Actual	=	582.30 psi	fv: Actual	=	41.50 psi
F'b	=	683.10 psi	F'v	=	108.00 psi
Load Combination		+D+L	Load Combination		+D+L
Location of maximum on span	=	4.500 ft	Location of maximum on span	=	8.245 ft
Span # where maximum occurs	=	Span # 1	Span # where maximum occurs	=	Span # 1

Maximum Deflection

Max Downward Transient Deflection	0.115 in	Ratio =	942 >=360	Span: 1 : L Only
Max Upward Transient Deflection	0 in	Ratio =	0 <360	n/a
Max Downward Total Deflection	0.147 in	Ratio =	733 >=240	Span: 1 : +D+L
Max Upward Total Deflection	0 in	Ratio =	0 <240	n/a

Maximum Forces & Stresses for Load Combinations

Load Combination		Max Stress Ratios										Moment Values			Shear Values		
Segment Length	Span #	M	V	CD	CM	C_t	CLx	C_F	Cfu	C_i	C_r	M	fb	F'b	V	fv	F'v
D Only														0.0	0.00	0.0	0.0
Length = 9.0 ft	1	0.210	0.095	0.90	1.00	1.00	1.00	1.100	1.00	0.80	1.15	0.23	129.0	614.8	0.09	9.2	97.2
+D+L					1.00	1.00	1.00	1.100	1.00	0.80	1.15			0.0	0.00	0.0	0.0
Length = 9.0 ft	1	0.852	0.384	1.00	1.00	1.00	1.00	1.100	1.00	0.80	1.15	1.04	582.3	683.1	0.38	41.5	108.0
+D+0.750L					1.00	1.00	1.00	1.100	1.00	0.80	1.15			0.0	0.00	0.0	0.0
Length = 9.0 ft	1	0.549	0.248	1.25	1.00	1.00	1.00	1.100	1.00	0.80	1.15	0.84	469.0	853.9	0.31	33.4	135.0
+0.60D					1.00	1.00	1.00	1.100	1.00	0.80	1.15			0.0	0.00	0.0	0.0
Length = 9.0 ft	1	0.071	0.032	1.60	1.00	1.00	1.00	1.100	1.00	0.80	1.15	0.14	77.4	1,093.0	0.05	5.5	172.8

Project Title:
Engineer:
Project ID:
Project Descr:

Wood Beam

Project File: 23-043.ec6

LIC# : KW-06016495, Build:20.23.08.30 CK Engineering LLC (c) ENERCALC INC 1983-2023

DESCRIPTION: MAIN FL. DECK JOIST 1

Overall Maximum Deflections

Load Combination	Span	Max. "-" Defl	Location in Span	Load Combination	Max. "+" Defl	Location in Span
+D+L	1	0.1472	4.533		0.0000	0.000

Maximum Deflections for Load Combinations

Load Combination	Span	Max. Downward Defl		Location in Span	Max. Upward Defl		Location in Span	
D Only	1	0.0326	in	4.533 ft	0.0000	in	0.000	ft
+D+L	1	0.1472	in	4.533 ft	0.0000	in	0.000	ft
+D+0.750L	1	0.1186	in	4.533 ft	0.0000	in	0.000	ft
+0.60D	1	0.0196	in	4.533 ft	0.0000	in	0.000	ft
L Only	1	0.1146	in	4.533 ft	0.0000	in	0.000	ft

Vertical Reactions

Support notation : Far left is #1 Values in KIPS

Load Combination	Support 1	Support 2
Max Upward from all Load Conditions	0.461	0.461
Max Upward from Load Combinations	0.461	0.461
Max Upward from Load Cases	0.359	0.359
D Only	0.102	0.102
+D+L	0.461	0.461
+D+0.750L	0.372	0.372
+0.60D	0.061	0.061
L Only	0.359	0.359

Project Title:
Engineer:
Project ID:
Project Descr:

Wood Beam

Project File: 23-043.ec6

LIC# : KW-06016495, Build:20.23.08.30 CK Engineering LLC (c) ENERCALC INC 1983-2023

DESCRIPTION: HDR#1

CODE REFERENCES

Calculations per NDS 2018, IBC 2021, ASCE 7-16
Load Combination Set : IBC 2018

Material Properties

Analysis Method :	Allowable Stress Design	Fb +	875.0 psi	*E : Modulus of Elasticity*	
Load Combination	IBC 2018	Fb -	875.0 psi	Ebend- xx	1,300.0 ksi
		Fc - Prll	600.0 psi	Eminbend - xx	470.0 ksi
Wood Species :	Douglas Fir-Larch (North)	Fc - Perp	625.0 psi		
Wood Grade :	No.2	Fv	170.0 psi		
		Ft	425.0 psi	Density	30.590 pcf
Beam Bracing :	Beam is Fully Braced against lateral-torsional buckling				

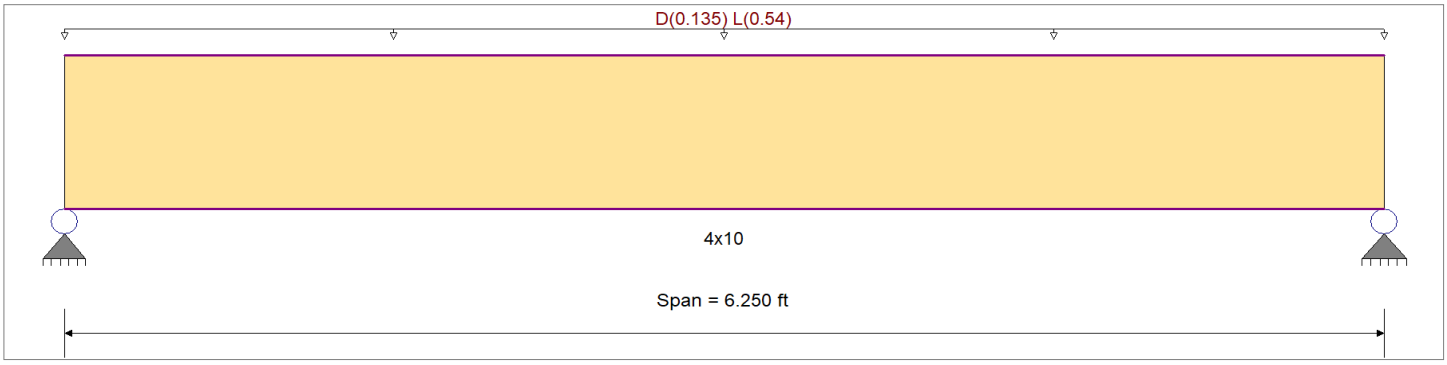

Applied Loads

Service loads entered. Load Factors will be applied for calculations.

Beam self weight calculated and added to loading
Uniform Load : D = 0.0150, L = 0.060 ksf, Tributary Width = 9.0 ft, (ROOF)

DESIGN SUMMARY

Design OK

Maximum Bending Stress Ratio	=	0.762 : 1	Maximum Shear Stress Ratio	=	0.441 : 1
Section used for this span		4x10	Section used for this span		4x10
fb: Actual	=	800.49 psi	fv: Actual	=	74.95 psi
F'b	=	1,050.00 psi	F'v	=	170.00 psi
Load Combination		+D+L	Load Combination		+D+L
Location of maximum on span	=	3.125 ft	Location of maximum on span	=	5.497 ft
Span # where maximum occurs	=	Span # 1	Span # where maximum occurs	=	Span # 1

Maximum Deflection

Max Downward Transient Deflection	0.062 in	Ratio =	1206 >=360	Span: 1 : L Only
Max Upward Transient Deflection	0 in	Ratio =	0 <360	n/a
Max Downward Total Deflection	0.078 in	Ratio =	955 >=240	Span: 1 : +D+L
Max Upward Total Deflection	0 in	Ratio =	0 <240	n/a

Maximum Forces & Stresses for Load Combinations

Load Combination		Max Stress Ratios										Moment Values			Shear Values		
Segment Length	Span #	M	V	CD	CM	C_t	CLx	C_F	Cfu	C_i	C_r	M	fb	F'b	V	fv	F'v
D Only														0.0	0.00	0.0	0.0
Length = 6.250 ft	1	0.176	0.102	0.90	1.00	1.00	1.00	1.200	1.00	1.00	1.00	0.69	166.6	945.0	0.34	15.6	153.0
+D+L					1.00	1.00	1.00	1.200	1.00	1.00	1.00			0.0	0.00	0.0	0.0
Length = 6.250 ft	1	0.762	0.441	1.00	1.00	1.00	1.00	1.200	1.00	1.00	1.00	3.33	800.5	1,050.0	1.62	74.9	170.0
+D+0.750L					1.00	1.00	1.00	1.200	1.00	1.00	1.00			0.0	0.00	0.0	0.0
Length = 6.250 ft	1	0.489	0.283	1.25	1.00	1.00	1.00	1.200	1.00	1.00	1.00	2.67	642.0	1,312.5	1.30	60.1	212.5
+0.60D					1.00	1.00	1.00	1.200	1.00	1.00	1.00			0.0	0.00	0.0	0.0
Length = 6.250 ft	1	0.059	0.034	1.60	1.00	1.00	1.00	1.200	1.00	1.00	1.00	0.42	99.9	1,680.0	0.20	9.4	272.0

Wood Beam

LIC# : KW-06016495, Build:20.23.08.30 CK Engineering LLC (c) ENERCALC INC 1983-2023

DESCRIPTION: HDR#1

Overall Maximum Deflections

Load Combination	Span	Max. "-" Defl	Location in Span	Load Combination	Max. "+" Defl	Location in Span
+D+L	1	0.0785	3.148		0.0000	0.000

Maximum Deflections for Load Combinations

Load Combination	Span	Max. Downward Defl		Location in Span	Max. Upward Defl		Location in Span	
D Only	1	0.0163	in	3.148 ft	0.0000	in	0.000	ft
+D+L	1	0.0785	in	3.148 ft	0.0000	in	0.000	ft
+D+0.750L	1	0.0629	in	3.148 ft	0.0000	in	0.000	ft
+0.60D	1	0.0098	in	3.148 ft	0.0000	in	0.000	ft
L Only	1	0.0621	in	3.148 ft	0.0000	in	0.000	ft

Vertical Reactions

Support notation : Far left is #1 Values in KIPS

Load Combination	Support 1	Support 2
Max Upward from all Load Conditions	2.131	2.131
Max Upward from Load Combinations	2.131	2.131
Max Upward from Load Cases	1.688	1.688
D Only	0.443	0.443
+D+L	2.131	2.131
+D+0.750L	1.709	1.709
+0.60D	0.266	0.266
L Only	1.688	1.688

Project Title:
Engineer:
Project ID:
Project Descr:

Wood Beam

Project File: 23-043.ec6

LIC# : KW-06016495, Build:20.23.08.30 CK Engineering LLC (c) ENERCALC INC 1983-2023

DESCRIPTION: HDR#2

CODE REFERENCES

Calculations per NDS 2018, IBC 2021, ASCE 7-16
Load Combination Set : IBC 2018

Material Properties

Analysis Method : Allowable Stress Design
Load Combination IBC 2018

Wood Species : DF/DF
Wood Grade : 24F-V4

Beam Bracing : Beam is Fully Braced against lateral-torsional buckling

Fb +	2,400.0 psi
Fb -	1,850.0 psi
Fc - Prll	1,650.0 psi
Fc - Perp	650.0 psi
Fv	265.0 psi
Ft	1,100.0 psi

E : Modulus of Elasticity

Ebend- xx	1,800.0 ksi
Eminbend - xx	950.0 ksi
Ebend- yy	1,600.0 ksi
Eminbend - yy	850.0 ksi
Density	31.210 pcf

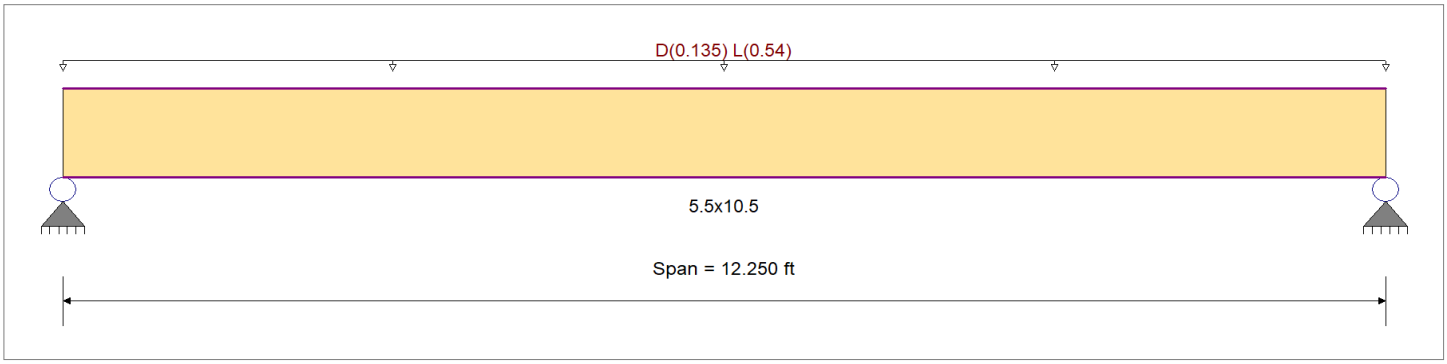

Applied Loads

Service loads entered. Load Factors will be applied for calculations.

Beam self weight calculated and added to loading
Uniform Load : D = 0.0150, L = 0.060 ksf, Tributary Width = 9.0 ft, (ROOF)

DESIGN SUMMARY

Design OK

Maximum Bending Stress Ratio	=	0.638 : 1	Maximum Shear Stress Ratio	=	0.356 : 1
Section used for this span		5.5x10.5	Section used for this span		5.5x10.5
fb: Actual	=	1,531.29 psi	fv: Actual	=	94.21 psi
F'b	=	2,400.00 psi	F'v	=	265.00 psi
Load Combination		+D+L	Load Combination		+D+L
Location of maximum on span	=	6.125 ft	Location of maximum on span	=	11.401 ft
Span # where maximum occurs	=	Span # 1	Span # where maximum occurs	=	Span # 1

Maximum Deflection

Max Downward Transient Deflection	0.288 in	Ratio =	510 >=360	Span: 1 : L Only
Max Upward Transient Deflection	0 in	Ratio =	0 <360	n/a
Max Downward Total Deflection	0.367 in	Ratio =	400 >=240	Span: 1 : +D+L
Max Upward Total Deflection	0 in	Ratio =	0 <240	n/a

Maximum Forces & Stresses for Load Combinations

Load Combination / Segment Length	Span #	Max Stress Ratios M	V	CD	CM	C_t	CLx	C_V	Cfu	C_i	C_r	Moment Values M	fb	F'b	Shear Values V	fv	F'v
D Only														0.0	0.00	0.0	0.0
Length = 12.250 ft	1	0.152	0.085	0.90	1.00	1.00	1.00	1.000	1.00	1.00	1.00	2.77	328.6	2,160.0	0.78	20.2	238.5
+D+L					1.00	1.00	1.00	1.000	1.00	1.00	1.00			0.0	0.00	0.0	0.0
Length = 12.250 ft	1	0.638	0.356	1.00	1.00	1.00	1.00	1.000	1.00	1.00	1.00	12.90	1,531.3	2,400.0	3.63	94.2	265.0
+D+0.750L					1.00	1.00	1.00	1.000	1.00	1.00	1.00			0.0	0.00	0.0	0.0
Length = 12.250 ft	1	0.410	0.229	1.25	1.00	1.00	1.00	1.000	1.00	1.00	1.00	10.36	1,230.6	3,000.0	2.91	75.7	331.3
+0.60D					1.00	1.00	1.00	1.000	1.00	1.00	1.00			0.0	0.00	0.0	0.0
Length = 12.250 ft	1	0.051	0.029	1.60	1.00	1.00	1.00	1.000	1.00	1.00	1.00	1.66	197.1	3,840.0	0.47	12.1	424.0

Wood Beam

LIC# : KW-06016495, Build:20.23.08.30 CK Engineering LLC (c) ENERCALC INC 1983-2023

DESCRIPTION: HDR#2

Overall Maximum Deflections

Load Combination	Span	Max. "-" Defl	Location in Span	Load Combination	Max. "+" Defl	Location in Span
+D+L	1	0.3669	6.170		0.0000	0.000

Maximum Deflections for Load Combinations

Load Combination	Span	Max. Downward Defl		Location in Span	Max. Upward Defl		Location in Span	
D Only	1	0.0787	in	6.170 ft	0.0000	in	0.000	ft
+D+L	1	0.3669	in	6.170 ft	0.0000	in	0.000	ft
+D+0.750L	1	0.2948	in	6.170 ft	0.0000	in	0.000	ft
+0.60D	1	0.0472	in	6.170 ft	0.0000	in	0.000	ft
L Only	1	0.2882	in	6.170 ft	0.0000	in	0.000	ft

Vertical Reactions

Support notation : Far left is #1 Values in KIPS

Load Combination	Support 1	Support 2
Max Upward from all Load Conditions	4.211	4.211
Max Upward from Load Combinations	4.211	4.211
Max Upward from Load Cases	3.308	3.308
D Only	0.904	0.904
+D+L	4.211	4.211
+D+0.750L	3.384	3.384
+0.60D	0.542	0.542
L Only	3.308	3.308

Project Title:
Engineer:
Project ID:
Project Descr:

Wood Beam

Project File: 23-043.ec6

LIC# : KW-06016495, Build:20.23.08.30 CK Engineering LLC (c) ENERCALC INC 1983-2023

DESCRIPTION: HDR#3

CODE REFERENCES

Calculations per NDS 2018, IBC 2021, ASCE 7-16
Load Combination Set : IBC 2018

Material Properties

Analysis Method : Allowable Stress Design
Load Combination IBC 2018

Wood Species : DF/DF
Wood Grade : 24F-V4

Beam Bracing : Beam is Fully Braced against lateral-torsional buckling

Fb +	2,400.0 psi
Fb -	1,850.0 psi
Fc - Prll	1,650.0 psi
Fc - Perp	650.0 psi
Fv	265.0 psi
Ft	1,100.0 psi

E : Modulus of Elasticity

Ebend- xx	1,800.0 ksi
Eminbend - xx	950.0 ksi
Ebend- yy	1,600.0 ksi
Eminbend - yy	850.0 ksi
Density	31.210 pcf

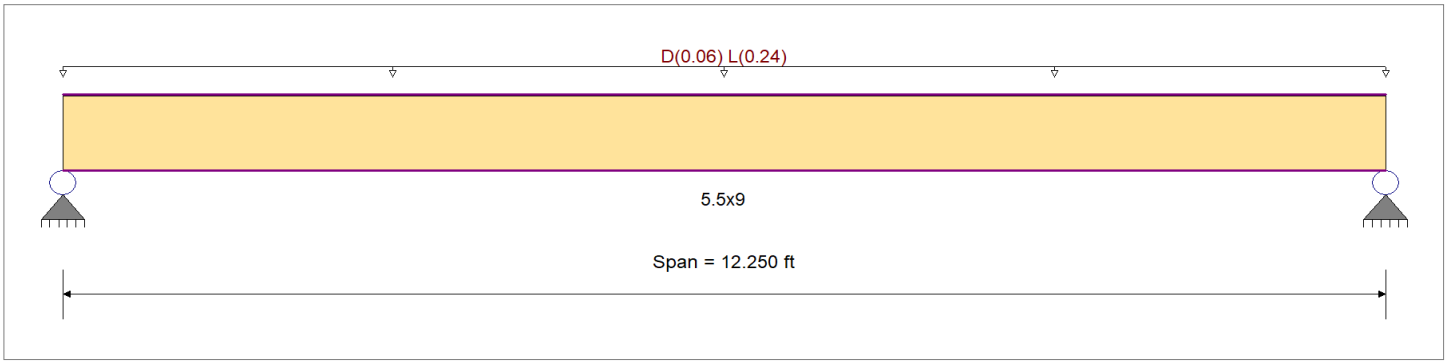

Applied Loads

Service loads entered. Load Factors will be applied for calculations.

Beam self weight calculated and added to loading
Uniform Load : D = 0.0150, L = 0.060 ksf, Tributary Width = 4.0 ft, (ROOF)

DESIGN SUMMARY

Design OK

Maximum Bending Stress Ratio	=	0.392 : 1	Maximum Shear Stress Ratio	=	0.192 : 1
Section used for this span		5.5x9	Section used for this span		5.5x9
fb: Actual	=	941.99 psi	fv: Actual	=	50.94 psi
F'b	=	2,400.00 psi	F'v	=	265.00 psi
Load Combination		+D+L	Load Combination		+D+L
Location of maximum on span	=	6.125 ft	Location of maximum on span	=	11.535 ft
Span # where maximum occurs	=	Span # 1	Span # where maximum occurs	=	Span # 1

Maximum Deflection

Max Downward Transient Deflection	0.203 in	Ratio =	722 >=360	Span: 1 : L Only
Max Upward Transient Deflection	0 in	Ratio =	0 <360	n/a
Max Downward Total Deflection	0.263 in	Ratio =	558 >=240	Span: 1 : +D+L
Max Upward Total Deflection	0 in	Ratio =	0 <240	n/a

Maximum Forces & Stresses for Load Combinations

Load Combination / Segment Length	Span #	Max Stress Ratios M	V	CD	CM	C_t	CLx	C_V	Cfu	C_i	C_r	Moment Values M	fb	F'b	Shear Values V	fv	F'v
D Only														0.0	0.00	0.0	0.0
Length = 12.250 ft	1	0.099	0.049	0.90	1.00	1.00	1.00	1.000	1.00	1.00	1.00	1.33	214.4	2,160.0	0.38	11.6	238.5
+D+L					1.00	1.00	1.00	1.000	1.00	1.00	1.00			0.0	0.00	0.0	0.0
Length = 12.250 ft	1	0.392	0.192	1.00	1.00	1.00	1.00	1.000	1.00	1.00	1.00	5.83	942.0	2,400.0	1.68	50.9	265.0
+D+0.750L					1.00	1.00	1.00	1.000	1.00	1.00	1.00			0.0	0.00	0.0	0.0
Length = 12.250 ft	1	0.253	0.124	1.25	1.00	1.00	1.00	1.000	1.00	1.00	1.00	4.70	760.1	3,000.0	1.36	41.1	331.3
+0.60D					1.00	1.00	1.00	1.000	1.00	1.00	1.00			0.0	0.00	0.0	0.0
Length = 12.250 ft	1	0.034	0.016	1.60	1.00	1.00	1.00	1.000	1.00	1.00	1.00	0.80	128.7	3,840.0	0.23	7.0	424.0

Wood Beam

LIC# : KW-06016495, Build:20.23.08.30 CK Engineering LLC (c) ENERCALC INC 1983-2023

DESCRIPTION: HDR#3

Overall Maximum Deflections

Load Combination	Span	Max. "-" Defl	Location in Span	Load Combination	Max. "+" Defl	Location in Span
+D+L	1	0.2633	6.170		0.0000	0.000

Maximum Deflections for Load Combinations

Load Combination	Span	Max. Downward Defl		Location in Span	Max. Upward Defl		Location in Span	
D Only	1	0.0599	in	6.170 ft	0.0000	in	0.000	ft
+D+L	1	0.2633	in	6.170 ft	0.0000	in	0.000	ft
+D+0.750L	1	0.2125	in	6.170 ft	0.0000	in	0.000	ft
+0.60D	1	0.0360	in	6.170 ft	0.0000	in	0.000	ft
L Only	1	0.2034	in	6.170 ft	0.0000	in	0.000	ft

Vertical Reactions

Support notation : Far left is #1 Values in KIPS

Load Combination	Support 1	Support 2
Max Upward from all Load Conditions	1.903	1.903
Max Upward from Load Combinations	1.903	1.903
Max Upward from Load Cases	1.470	1.470
D Only	0.433	0.433
+D+L	1.903	1.903
+D+0.750L	1.536	1.536
+0.60D	0.260	0.260
L Only	1.470	1.470

Project Title:
Engineer:
Project ID:
Project Descr:

Wood Beam

Project File: 23-043.ec6

LIC# : KW-06016495, Build:20.23.08.30 CK Engineering LLC (c) ENERCALC INC 1983-2023

DESCRIPTION: HDR#4

CODE REFERENCES

Calculations per NDS 2018, IBC 2021, ASCE 7-16
Load Combination Set : IBC 2018

Material Properties

Analysis Method : Allowable Stress Design
Load Combination IBC 2018

Wood Species : DF/DF
Wood Grade : 24F-V4

Beam Bracing : Beam is Fully Braced against lateral-torsional buckling

Fb +	2,400.0 psi
Fb -	1,850.0 psi
Fc - Prll	1,650.0 psi
Fc - Perp	650.0 psi
Fv	265.0 psi
Ft	1,100.0 psi

E : Modulus of Elasticity

Ebend- xx	1,800.0 ksi
Eminbend - xx	950.0 ksi
Ebend- yy	1,600.0 ksi
Eminbend - yy	850.0 ksi
Density	31.210 pcf

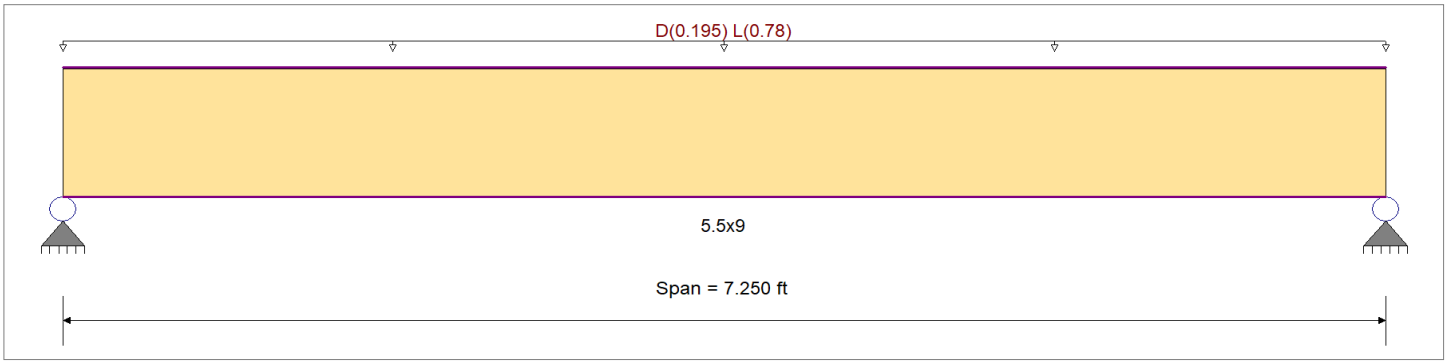

Applied Loads

Service loads entered. Load Factors will be applied for calculations.

Beam self weight calculated and added to loading
Uniform Load : D = 0.0150, L = 0.060 ksf, Tributary Width = 13.0 ft, (ROOF)

DESIGN SUMMARY

Design OK

Maximum Bending Stress Ratio	=	0.436 : 1	Maximum Shear Stress Ratio	=	0.325 : 1
Section used for this span		5.5x9	Section used for this span		5.5x9
fb: Actual	=	1,046.71 psi	fv: Actual	=	86.15 psi
F'b	=	2,400.00 psi	F'v	=	265.00 psi
Load Combination		+D+L	Load Combination		+D+L
Location of maximum on span	=	3.625 ft	Location of maximum on span	=	0.000 ft
Span # where maximum occurs	=	Span # 1	Span # where maximum occurs	=	Span # 1

Maximum Deflection

Max Downward Transient Deflection	0.081 in	Ratio =	1072 >=360	Span: 1 : L Only
Max Upward Transient Deflection	0 in	Ratio =	0 <360	n/a
Max Downward Total Deflection	0.102 in	Ratio =	848 >=240	Span: 1 : +D+L
Max Upward Total Deflection	0 in	Ratio =	0 <240	n/a

Maximum Forces & Stresses for Load Combinations

Load Combination / Segment Length	Span #	Max Stress Ratios M	V	CD	CM	C_t	CLx	C_V	Cfu	C_i	C_r	Moment Values M	fb	F'b	Shear Values V	fv	F'v
D Only														0.0	0.00	0.0	0.0
Length = 7.250 ft	1	0.101	0.075	0.90	1.00	1.00	1.00	1.000	1.00	1.00	1.00	1.35	218.5	2,160.0	0.59	18.0	238.5
+D+L					1.00	1.00	1.00	1.000	1.00	1.00	1.00			0.0	0.00	0.0	0.0
Length = 7.250 ft	1	0.436	0.325	1.00	1.00	1.00	1.00	1.000	1.00	1.00	1.00	6.48	1,046.7	2,400.0	2.84	86.2	265.0
+D+0.750L					1.00	1.00	1.00	1.000	1.00	1.00	1.00			0.0	0.00	0.0	0.0
Length = 7.250 ft	1	0.280	0.209	1.25	1.00	1.00	1.00	1.000	1.00	1.00	1.00	5.20	839.6	3,000.0	2.28	69.1	331.3
+0.60D					1.00	1.00	1.00	1.000	1.00	1.00	1.00			0.0	0.00	0.0	0.0
Length = 7.250 ft	1	0.034	0.025	1.60	1.00	1.00	1.00	1.000	1.00	1.00	1.00	0.81	131.1	3,840.0	0.36	10.8	424.0

Wood Beam

LIC# : KW-06016495, Build:20.23.08.30 CK Engineering LLC (c) ENERCALC INC 1983-2023

DESCRIPTION: HDR#4

Overall Maximum Deflections

Load Combination	Span	Max. "-" Defl	Location in Span	Load Combination	Max. "+" Defl	Location in Span
+D+L	1	0.1025	3.651		0.0000	0.000

Maximum Deflections for Load Combinations

Load Combination	Span	Max. Downward Defl		Location in Span	Max. Upward Defl		Location in Span	
D Only	1	0.0214	in	3.651 ft	0.0000	in	0.000	ft
+D+L	1	0.1025	in	3.651 ft	0.0000	in	0.000	ft
+D+0.750L	1	0.0822	in	3.651 ft	0.0000	in	0.000	ft
+0.60D	1	0.0128	in	3.651 ft	0.0000	in	0.000	ft
L Only	1	0.0811	in	3.651 ft	0.0000	in	0.000	ft

Vertical Reactions

Support notation : Far left is #1 Values in KIPS

Load Combination	Support 1	Support 2
Max Upward from all Load Conditions	3.573	3.573
Max Upward from Load Combinations	3.573	3.573
Max Upward from Load Cases	2.828	2.828
D Only	0.746	0.746
+D+L	3.573	3.573
+D+0.750L	2.866	2.866
+0.60D	0.447	0.447
L Only	2.828	2.828

Project Title:
Engineer:
Project ID:
Project Descr:

Wood Beam

Project File: 23-043.ec6

LIC# : KW-06016495, Build:20.23.08.30 CK Engineering LLC (c) ENERCALC INC 1983-2023

DESCRIPTION: HDR#5

CODE REFERENCES

Calculations per NDS 2018, IBC 2021, ASCE 7-16
Load Combination Set : IBC 2018

Material Properties

Analysis Method :	Allowable Stress Design	Fb +	875 psi	*E : Modulus of Elasticity*	
Load Combination	IBC 2018	Fb -	875 psi	Ebend- xx	1300 ksi
		Fc - Prll	600 psi	Eminbend - xx	470 ksi
Wood Species	: Douglas Fir-Larch (North)	Fc - Perp	625 psi		
Wood Grade	: No.2	Fv	170 psi		
		Ft	425 psi	Density	30.59 pcf
Beam Bracing	: Beam is Fully Braced against lateral-torsional buckling				

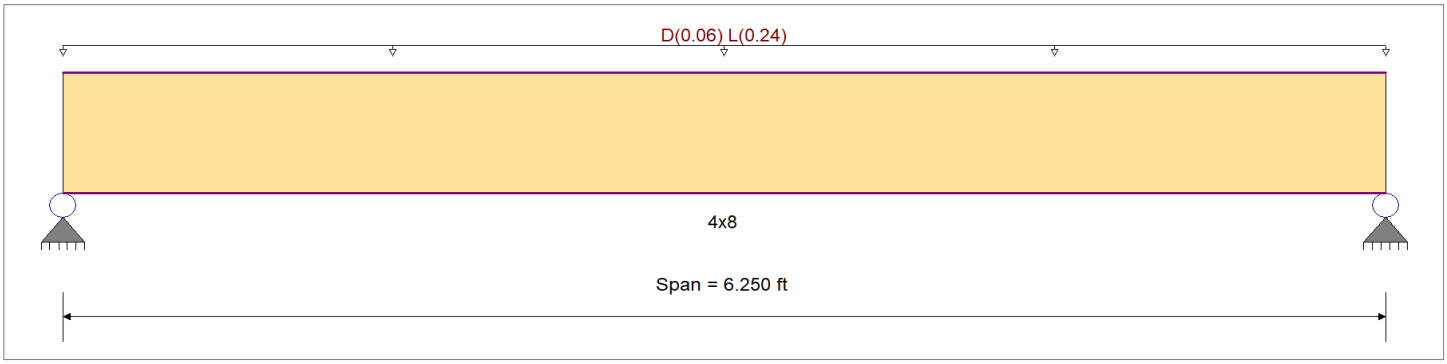

Applied Loads

Service loads entered. Load Factors will be applied for calculations.

Beam self weight calculated and added to loading
Uniform Load : D = 0.0150, L = 0.060 ksf, Tributary Width = 4.0 ft, (ROOF)

DESIGN SUMMARY

Design OK

Maximum Bending Stress Ratio	=	0.513 : 1	Maximum Shear Stress Ratio	=	0.269 : 1
Section used for this span		4x8	Section used for this span		4x8
fb: Actual	=	583.60 psi	fv: Actual	=	45.71 psi
F'b	=	1,137.50 psi	F'v	=	170.00 psi
Load Combination		+D+L	Load Combination		+D+L
Location of maximum on span	=	3.125 ft	Location of maximum on span	=	5.657 ft
Span # where maximum occurs	=	Span # 1	Span # where maximum occurs	=	Span # 1

Maximum Deflection

Max Downward Transient Deflection	0.057 in	Ratio =	1307 >=360	Span: 1 : L Only
Max Upward Transient Deflection	0 in	Ratio =	0 <360	n/a
Max Downward Total Deflection	0.073 in	Ratio =	1027 >=240	Span: 1 : +D+L
Max Upward Total Deflection	0 in	Ratio =	0 <240	n/a

Maximum Forces & Stresses for Load Combinations

Load Combination		Max Stress Ratios										Moment Values			Shear Values		
Segment Length	Span #	M	V	CD	CM	C_t	CLx	C_F	Cfu	C_i	C_r	M	fb	F'b	V	fv	F'v
D Only														0.0	0.00	0.0	0.0
Length = 6.250 ft	1	0.122	0.064	0.90	1.00	1.00	1.00	1.300	1.00	1.00	1.00	0.32	125.0	1,023.8	0.17	9.8	153.0
+D+L					1.00	1.00	1.00	1.300	1.00	1.00	1.00			0.0	0.00	0.0	0.0
Length = 6.250 ft	1	0.513	0.269	1.00	1.00	1.00	1.00	1.300	1.00	1.00	1.00	1.49	583.6	1,137.5	0.77	45.7	170.0
+D+0.750L					1.00	1.00	1.00	1.300	1.00	1.00	1.00			0.0	0.00	0.0	0.0
Length = 6.250 ft	1	0.330	0.173	1.25	1.00	1.00	1.00	1.300	1.00	1.00	1.00	1.20	468.9	1,421.9	0.62	36.7	212.5
+0.60D					1.00	1.00	1.00	1.300	1.00	1.00	1.00			0.0	0.00	0.0	0.0
Length = 6.250 ft	1	0.041	0.022	1.60	1.00	1.00	1.00	1.300	1.00	1.00	1.00	0.19	75.0	1,820.0	0.10	5.9	272.0

Wood Beam

LIC# : KW-06016495, Build:20.23.08.30 CK Engineering LLC (c) ENERCALC INC 1983-2023

DESCRIPTION: HDR#5

Overall Maximum Deflections

Load Combination	Span	Max. "-" Defl	Location in Span	Load Combination	Max. "+" Defl	Location in Span
+D+L	1	0.0730	3.148		0.0000	0.000

Maximum Deflections for Load Combinations

Load Combination	Span	Max. Downward Defl		Location in Span	Max. Upward Defl		Location in Span	
D Only	1	0.0156	in	3.148 ft	0.0000	in	0.000	ft
+D+L	1	0.0730	in	3.148 ft	0.0000	in	0.000	ft
+D+0.750L	1	0.0586	in	3.148 ft	0.0000	in	0.000	ft
+0.60D	1	0.0094	in	3.148 ft	0.0000	in	0.000	ft
L Only	1	0.0574	in	3.148 ft	0.0000	in	0.000	ft

Vertical Reactions

Support notation : Far left is #1 Values in KIPS

Load Combination	Support 1	Support 2
Max Upward from all Load Conditions	0.954	0.954
Max Upward from Load Combinations	0.954	0.954
Max Upward from Load Cases	0.750	0.750
D Only	0.204	0.204
+D+L	0.954	0.954
+D+0.750L	0.767	0.767
+0.60D	0.123	0.123
L Only	0.750	0.750

Project Title:
Engineer:
Project ID:
Project Descr:

Wood Beam

Project File: 23-043.ec6

LIC# : KW-06016495, Build:20.23.08.30 CK Engineering LLC (c) ENERCALC INC 1983-2023

DESCRIPTION: HDR#6

CODE REFERENCES

Calculations per NDS 2018, IBC 2021, ASCE 7-16
Load Combination Set : IBC 2018

Material Properties

Analysis Method : Allowable Stress Design
Load Combination IBC 2018

Wood Species : DF/DF
Wood Grade : 24F-V4

Beam Bracing : Beam is Fully Braced against lateral-torsional buckling

Fb +	2,400.0 psi
Fb -	1,850.0 psi
Fc - Prll	1,650.0 psi
Fc - Perp	650.0 psi
Fv	265.0 psi
Ft	1,100.0 psi

E : Modulus of Elasticity

Ebend- xx	1,800.0 ksi
Eminbend - xx	950.0 ksi
Ebend- yy	1,600.0 ksi
Eminbend - yy	850.0 ksi
Density	31.210 pcf

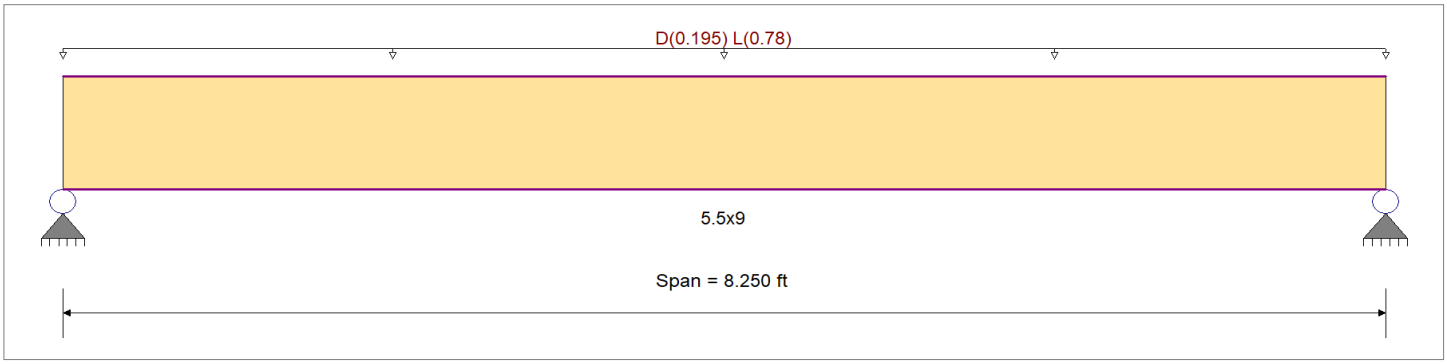

Applied Loads

Service loads entered. Load Factors will be applied for calculations.

Beam self weight calculated and added to loading
Uniform Load : D = 0.0150, L = 0.060 ksf, Tributary Width = 13.0 ft, (ROOF)

DESIGN SUMMARY

Design OK

Maximum Bending Stress Ratio	=	0.565 : 1	Maximum Shear Stress Ratio	=	0.384 : 1
Section used for this span		5.5x9	Section used for this span		5.5x9
fb: Actual	=	1,355.38 psi	fv: Actual	=	101.63 psi
F'b	=	2,400.00 psi	F'v	=	265.00 psi
Load Combination		+D+L	Load Combination		+D+L
Location of maximum on span	=	4.125 ft	Location of maximum on span	=	0.000 ft
Span # where maximum occurs	=	Span # 1	Span # where maximum occurs	=	Span # 1

Maximum Deflection

Max Downward Transient Deflection	0.136 in	Ratio =	728	>=360	Span: 1 : L Only
Max Upward Transient Deflection	0 in	Ratio =	0	<360	n/a
Max Downward Total Deflection	0.172 in	Ratio =	576	>=240	Span: 1 : +D+L
Max Upward Total Deflection	0 in	Ratio =	0	<240	n/a

Maximum Forces & Stresses for Load Combinations

Load Combination / Segment Length	Span #	Max Stress Ratios M	V	CD	CM	C_t	CLx	C_V	Cfu	C_i	C_r	Moment Values M	fb	F'b	Shear Values V	fv	F'v
D Only														0.0	0.00	0.0	0.0
Length = 8.250 ft	1	0.131	0.089	0.90	1.00	1.00	1.00	1.000	1.00	1.00	1.00	1.75	282.9	2,160.0	0.70	21.2	238.5
+D+L					1.00	1.00	1.00	1.000	1.00	1.00	1.00			0.0	0.00	0.0	0.0
Length = 8.250 ft	1	0.565	0.384	1.00	1.00	1.00	1.00	1.000	1.00	1.00	1.00	8.39	1,355.4	2,400.0	3.35	101.6	265.0
+D+0.750L					1.00	1.00	1.00	1.000	1.00	1.00	1.00			0.0	0.00	0.0	0.0
Length = 8.250 ft	1	0.362	0.246	1.25	1.00	1.00	1.00	1.000	1.00	1.00	1.00	6.73	1,087.3	3,000.0	2.69	81.5	331.3
+0.60D					1.00	1.00	1.00	1.000	1.00	1.00	1.00			0.0	0.00	0.0	0.0
Length = 8.250 ft	1	0.044	0.030	1.60	1.00	1.00	1.00	1.000	1.00	1.00	1.00	1.05	169.7	3,840.0	0.42	12.7	424.0

Wood Beam

LIC# : KW-06016495, Build:20.23.08.30 CK Engineering LLC (c) ENERCALC INC 1983-2023

DESCRIPTION: HDR#6

Overall Maximum Deflections

Load Combination	Span	Max. "-" Defl	Location in Span	Load Combination	Max. "+" Defl	Location in Span
+D+L	1	0.1718	4.155		0.0000	0.000

Maximum Deflections for Load Combinations

Load Combination	Span	Max. Downward Defl		Location in Span	Max. Upward Defl		Location in Span	
D Only	1	0.0359	in	4.155 ft	0.0000	in	0.000	ft
+D+L	1	0.1718	in	4.155 ft	0.0000	in	0.000	ft
+D+0.750L	1	0.1378	in	4.155 ft	0.0000	in	0.000	ft
+0.60D	1	0.0215	in	4.155 ft	0.0000	in	0.000	ft
L Only	1	0.1360	in	4.155 ft	0.0000	in	0.000	ft

Vertical Reactions

Support notation : Far left is #1 Values in KIPS

Load Combination	Support 1	Support 2
Max Upward from all Load Conditions	4.066	4.066
Max Upward from Load Combinations	4.066	4.066
Max Upward from Load Cases	3.218	3.218
D Only	0.849	0.849
+D+L	4.066	4.066
+D+0.750L	3.262	3.262
+0.60D	0.509	0.509
L Only	3.218	3.218

Project Title:
Engineer:
Project ID:
Project Descr:

Wood Beam

Project File: 23-043.ec6

LIC# : KW-06016495, Build:20.23.08.30 CK Engineering LLC (c) ENERCALC INC 1983-2023

DESCRIPTION: HDR#7

CODE REFERENCES

Calculations per NDS 2018, IBC 2021, ASCE 7-16
Load Combination Set : IBC 2018

Material Properties

Analysis Method :	Allowable Stress Design	Fb +	875.0 psi	*E : Modulus of Elasticity*	
Load Combination	IBC 2018	Fb -	875.0 psi	Ebend- xx	1,300.0 ksi
		Fc - Prll	600.0 psi	Eminbend - xx	470.0 ksi
Wood Species :	Douglas Fir-Larch (North)	Fc - Perp	625.0 psi		
Wood Grade :	No.2	Fv	170.0 psi		
		Ft	425.0 psi	Density	30.590 pcf
Beam Bracing :	Beam is Fully Braced against lateral-torsional buckling				

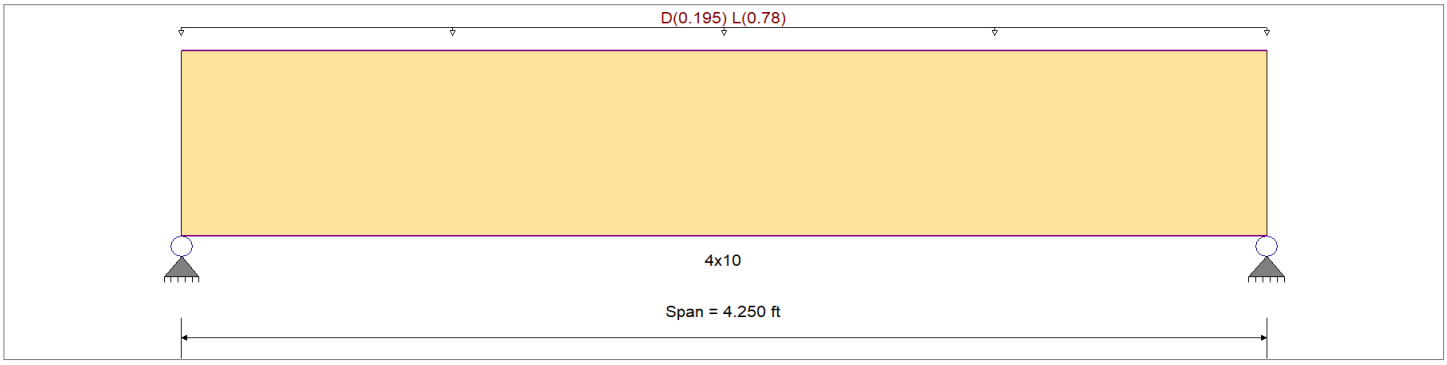

Applied Loads

Service loads entered. Load Factors will be applied for calculations.

Beam self weight calculated and added to loading
Uniform Load : D = 0.0150, L = 0.060 ksf, Tributary Width = 13.0 ft, (ROOF)

DESIGN SUMMARY

Design OK

Maximum Bending Stress Ratio	=	0.508 : 1	Maximum Shear Stress Ratio	=	0.365 : 1
Section used for this span		4x10	Section used for this span		4x10
fb: Actual	=	533.00 psi	fv: Actual	=	62.10 psi
F'b	=	1,050.00 psi	F'v	=	170.00 psi
Load Combination		+D+L	Load Combination		+D+L
Location of maximum on span	=	2.125 ft	Location of maximum on span	=	0.000 ft
Span # where maximum occurs	=	Span # 1	Span # where maximum occurs	=	Span # 1

Maximum Deflection

Max Downward Transient Deflection	0.019 in	Ratio =	2657 >=360	Span: 1 : L Only
Max Upward Transient Deflection	0 in	Ratio =	0 <360	n/a
Max Downward Total Deflection	0.024 in	Ratio =	2111 >=240	Span: 1 : +D+L
Max Upward Total Deflection	0 in	Ratio =	0 <240	n/a

Maximum Forces & Stresses for Load Combinations

Load Combination		Max Stress Ratios										Moment Values			Shear Values		
Segment Length	Span #	M	V	CD	CM	C_t	CLx	C_F	Cfu	C_i	C_r	M	fb	F'b	V	fv	F'v
D Only														0.0	0.00	0.0	0.0
Length = 4.250 ft	1	0.116	0.083	0.90	1.00	1.00	1.00	1.200	1.00	1.00	1.00	0.46	109.6	945.0	0.28	12.8	153.0
+D+L					1.00	1.00	1.00	1.200	1.00	1.00	1.00			0.0	0.00	0.0	0.0
Length = 4.250 ft	1	0.508	0.365	1.00	1.00	1.00	1.00	1.200	1.00	1.00	1.00	2.22	533.0	1,050.0	1.34	62.1	170.0
+D+0.750L					1.00	1.00	1.00	1.200	1.00	1.00	1.00			0.0	0.00	0.0	0.0
Length = 4.250 ft	1	0.325	0.234	1.25	1.00	1.00	1.00	1.200	1.00	1.00	1.00	1.78	427.1	1,312.5	1.07	49.8	212.5
+0.60D					1.00	1.00	1.00	1.200	1.00	1.00	1.00			0.0	0.00	0.0	0.0
Length = 4.250 ft	1	0.039	0.028	1.60	1.00	1.00	1.00	1.200	1.00	1.00	1.00	0.27	65.8	1,680.0	0.17	7.7	272.0

Wood Beam

LIC# : KW-06016495, Build:20.23.08.30 CK Engineering LLC (c) ENERCALC INC 1983-2023

DESCRIPTION: HDR#7

Overall Maximum Deflections

Load Combination	Span	Max. "-" Defl	Location in Span	Load Combination	Max. "+" Defl	Location in Span
+D+L	1	0.0242	2.141		0.0000	0.000

Maximum Deflections for Load Combinations

Load Combination	Span	Max. Downward Defl		Location in Span	Max. Upward Defl		Location in Span	
D Only	1	0.0050	in	2.141 ft	0.0000	in	0.000	ft
+D+L	1	0.0242	in	2.141 ft	0.0000	in	0.000	ft
+D+0.750L	1	0.0194	in	2.141 ft	0.0000	in	0.000	ft
+0.60D	1	0.0030	in	2.141 ft	0.0000	in	0.000	ft
L Only	1	0.0192	in	2.141 ft	0.0000	in	0.000	ft

Vertical Reactions

Support notation : Far left is #1 Values in KIPS

Load Combination	Support 1	Support 2
Max Upward from all Load Conditions	2.086	2.086
Max Upward from Load Combinations	2.086	2.086
Max Upward from Load Cases	1.658	1.658
D Only	0.429	0.429
+D+L	2.086	2.086
+D+0.750L	1.672	1.672
+0.60D	0.257	0.257
L Only	1.658	1.658

Project Title:
Engineer:
Project ID:
Project Descr:

Wood Beam

Project File: 23-043.ec6

LIC# : KW-06016495, Build:20.23.08.30 CK Engineering LLC (c) ENERCALC INC 1983-2023

DESCRIPTION: HDR#8

CODE REFERENCES

Calculations per NDS 2018, IBC 2021, ASCE 7-16
Load Combination Set : IBC 2018

Material Properties

Analysis Method : Allowable Stress Design
Load Combination IBC 2018

Wood Species : DF/DF
Wood Grade : 24F-V4

Beam Bracing : Beam is Fully Braced against lateral-torsional buckling

Fb +	2,400.0 psi
Fb -	1,850.0 psi
Fc - Prll	1,650.0 psi
Fc - Perp	650.0 psi
Fv	265.0 psi
Ft	1,100.0 psi

E : Modulus of Elasticity

Ebend- xx	1,800.0 ksi
Eminbend - xx	950.0 ksi
Ebend- yy	1,600.0 ksi
Eminbend - yy	850.0 ksi
Density	31.210 pcf

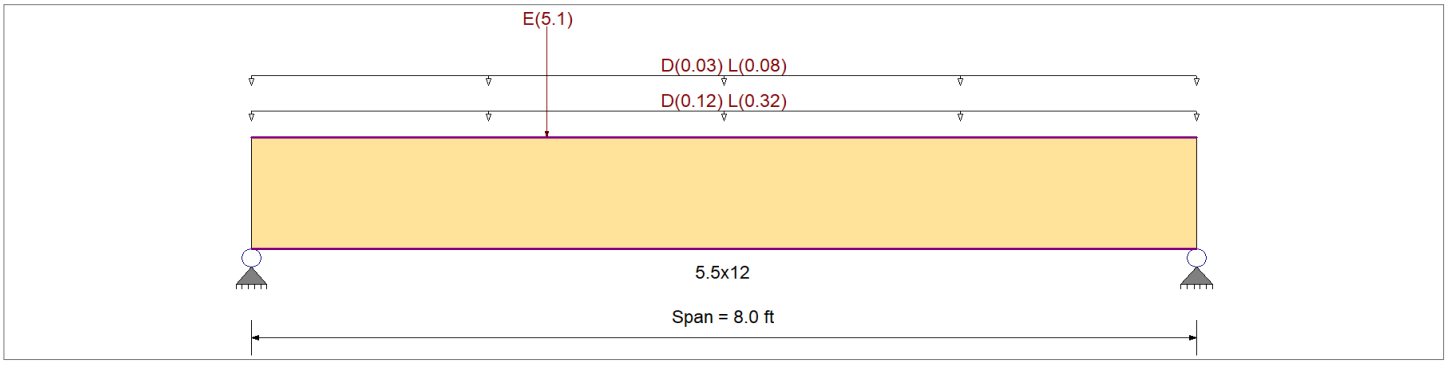

Applied Loads

Service loads entered. Load Factors will be applied for calculations.

Beam self weight calculated and added to loading
Uniform Load : D = 0.0150, L = 0.040 ksf, Tributary Width = 8.0 ft, (FLOOR)
Uniform Load : D = 0.0150, L = 0.040 ksf, Tributary Width = 2.0 ft, (DECK)
Point Load : E = 5.10 k @ 2.50 ft, (2SW2)

DESIGN SUMMARY

Design OK

Maximum Bending Stress Ratio	=	0.973 : 1	Maximum Shear Stress Ratio	=	0.886 : 1
Section used for this span		5.5x12	Section used for this span		5.5x12
fb: Actual	=	3,737.64 psi	fv: Actual	=	375.57 psi
F'b	=	3,840.00 psi	F'v	=	424.00 psi
Load Combination		+1.157D+4.550E	Load Combination		+1.157D+4.550E
Location of maximum on span	=	2.511 ft	Location of maximum on span	=	0.000 ft
Span # where maximum occurs	=	Span # 1	Span # where maximum occurs	=	Span # 1

Maximum Deflection

Max Downward Transient Deflection	0.055 in	Ratio =	1753 >=360	Span: 1 : E Only
Max Upward Transient Deflection	0 in	Ratio =	0 <360	n/a
Max Downward Total Deflection	0.059 in	Ratio =	1633 >=240	Span: 1 : +D+0.750L+0.5250E
Max Upward Total Deflection	0 in	Ratio =	0 <240	n/a

Maximum Forces & Stresses for Load Combinations

Load Combination / Segment Length	Span #	Max Stress Ratios M	V	CD	CM	C_t	CLx	C_V	Cfu	C_i	C_r	Moment Values M	fb	F'b	Shear Values V	fv	F'v
D Only														0.0	0.00	0.0	0.0
Length = 8.0 ft	1	0.055	0.047	0.90	1.00	1.00	1.00	1.000	1.00	1.00	1.00	1.31	119.5	2,160.0	0.49	11.2	238.5
+D+L					1.00	1.00	1.00	1.000	1.00	1.00	1.00			0.0	0.00	0.0	0.0
Length = 8.0 ft	1	0.171	0.146	1.00	1.00	1.00	1.00	1.000	1.00	1.00	1.00	4.51	410.4	2,400.0	1.70	38.6	265.0
+D+0.750L					1.00	1.00	1.00	1.000	1.00	1.00	1.00			0.0	0.00	0.0	0.0
Length = 8.0 ft	1	0.113	0.096	1.25	1.00	1.00	1.00	1.000	1.00	1.00	1.00	3.71	337.7	3,000.0	1.40	31.7	331.3
+1.157D+4.550E					1.00	1.00	1.00	1.000	1.00	1.00	1.00			0.0	0.00	0.0	0.0
Length = 8.0 ft	1	0.973	0.886	1.60	1.00	1.00	1.00	1.000	1.00	1.00	1.00	41.11	3,737.6	3,840.0	16.53	375.6	424.0
+1.118D+0.750L+3.413E					1.00	1.00	1.00	1.000	1.00	1.00	1.00			0.0	0.00	0.0	0.0

Project Title:
Engineer:
Project ID:
Project Descr:

Wood Beam

Project File: 23-043.ec6

LIC# : KW-06016495, Build:20.23.08.30 CK Engineering LLC (c) ENERCALC INC 1983-2023

DESCRIPTION: HDR#8

Maximum Forces & Stresses for Load Combinations

Load Combination		Max Stress Ratios										Moment Values			Shear Values		
Segment Length	Span #	M	V	CD	CM	C_t	CLx	C_V	Cfu	C_i	C_r	M	fb	F'b	V	fv	F'v
Length = 8.0 ft	1	0.786	0.719	1.60	1.00	1.00	1.00	1.000	1.00	1.00	1.00	33.19	3,016.9	3,840.0	13.42	305.0	424.0
+0.60D					1.00	1.00	1.00	1.000	1.00	1.00	1.00			0.0	0.00	0.0	0.0
Length = 8.0 ft	1	0.019	0.016	1.60	1.00	1.00	1.00	1.000	1.00	1.00	1.00	0.79	71.7	3,840.0	0.30	6.7	424.0
+0.4432D+4.550E					1.00	1.00	1.00	1.000	1.00	1.00	1.00			0.0	0.00	0.0	0.0
Length = 8.0 ft	1	0.954	0.867	1.60	1.00	1.00	1.00	1.000	1.00	1.00	1.00	40.31	3,664.2	3,840.0	16.17	367.6	424.0

Overall Maximum Deflections

Load Combination	Span	Max. "-" Defl	Location in Span	Load Combination	Max. "+" Defl	Location in Span
+D+0.750L+0.5250E	1	0.0588	3.825		0.0000	0.000

Maximum Deflections for Load Combinations

Load Combination	Span	Max. Downward Defl		Location in Span		Max. Upward Defl		Location in Span	
D Only	1	0.0107	in	4.029	ft	0.0000	in	0.000	ft
+D+L	1	0.0367	in	4.029	ft	0.0000	in	0.000	ft
+D+0.750L	1	0.0302	in	4.029	ft	0.0000	in	0.000	ft
+D+0.70E	1	0.0489	in	3.708	ft	0.0000	in	0.000	ft
+D+0.750L+0.5250E	1	0.0588	in	3.825	ft	0.0000	in	0.000	ft
+0.60D	1	0.0064	in	4.029	ft	0.0000	in	0.000	ft
+0.60D+0.70E	1	0.0447	in	3.679	ft	0.0000	in	0.000	ft
L Only	1	0.0260	in	4.029	ft	0.0000	in	0.000	ft
E Only	1	0.0547	in	3.620	ft	0.0000	in	0.000	ft

Vertical Reactions

Support notation : Far left is #1 Values in KIPS

Load Combination	Support 1	Support 2
Max Upward from all Load Conditions	3.698	2.694
Max Upward from Load Combinations	3.698	2.694
Max Upward from Load Cases	3.506	1.600
D Only	0.657	0.657
+D+L	2.257	2.257
+D+0.750L	1.857	1.857
+D+0.70E	3.112	1.773
+D+0.750L+0.5250E	3.698	2.694
+0.60D	0.394	0.394
+0.60D+0.70E	2.849	1.510
L Only	1.600	1.600
E Only	3.506	1.594

Project Title:
Engineer:
Project ID:
Project Descr:

Wood Beam

Project File: 23-043.ec6

LIC# : KW-06016495, Build:20.23.08.30 CK Engineering LLC (c) ENERCALC INC 1983-2023

DESCRIPTION: HDR#9

CODE REFERENCES

Calculations per NDS 2018, IBC 2021, ASCE 7-16
Load Combination Set : IBC 2018

Material Properties

Analysis Method : Allowable Stress Design
Load Combination IBC 2018

Wood Species : DF/DF
Wood Grade : 24F-V4

Beam Bracing : Beam is Fully Braced against lateral-torsional buckling

Fb +	2,400.0 psi
Fb -	1,850.0 psi
Fc - Prll	1,650.0 psi
Fc - Perp	650.0 psi
Fv	265.0 psi
Ft	1,100.0 psi

E : Modulus of Elasticity

Ebend- xx	1,800.0 ksi
Eminbend - xx	950.0 ksi
Ebend- yy	1,600.0 ksi
Eminbend - yy	850.0 ksi
Density	31.210 pcf

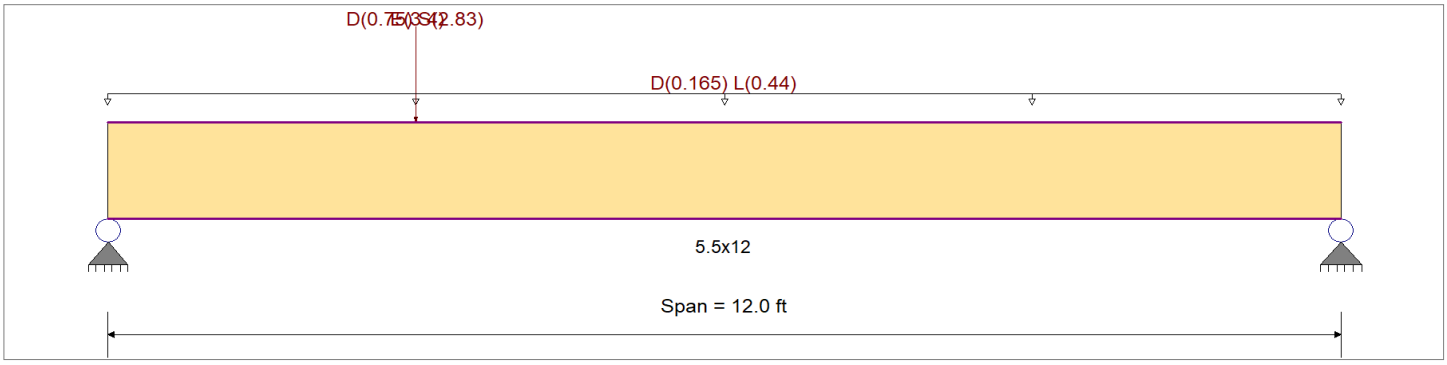

Applied Loads

Service loads entered. Load Factors will be applied for calculations.

Beam self weight calculated and added to loading
Uniform Load : D = 0.0150, L = 0.040 ksf, Tributary Width = 11.0 ft, (FLOOR)
Point Load : E = 3.40 k @ 3.0 ft, (SW2)
Point Load : D = 0.750, S = 2.830 k @ 3.0 ft, (HDR#4)

DESIGN SUMMARY

Design OK

Maximum Bending Stress Ratio	=	0.944 : 1	Maximum Shear Stress Ratio	=	0.729 : 1
Section used for this span		5.5x12	Section used for this span		5.5x12
fb: Actual	=	3,625.68 psi	fv: Actual	=	308.95 psi
F'b	=	3,840.00 psi	F'v	=	424.00 psi
Load Combination		+1.118D+0.750L+0.750S+3.413E	Load Combination		+1.118D+0.750L+0.750S+3.413E
Location of maximum on span	=	3.022 ft	Location of maximum on span	=	0.000 ft
Span # where maximum occurs	=	Span # 1	Span # where maximum occurs	=	Span # 1

Maximum Deflection

Max Downward Transient Deflection	0.145 in	Ratio =	994 >=360	Span: 1 : L Only
Max Upward Transient Deflection	0 in	Ratio =	0 <360	n/a
Max Downward Total Deflection	0.309 in	Ratio =	465 >=240	Span: 1 : +D+0.750L+0.750S+0.5250E
Max Upward Total Deflection	0 in	Ratio =	0 <240	n/a

Maximum Forces & Stresses for Load Combinations

Load Combination / Segment Length	Span #	Max Stress Ratios M	V	CD	CM	C_t	CLx	C_V	Cfu	C_i	C_r	Moment Values M	fb	F'b	Shear Values V	fv	F'v
D Only														0.0	0.00	0.0	0.0
Length = 12.0 ft	1	0.187	0.140	0.90	1.00	1.00	1.00	1.000	1.00	1.00	1.00	4.45	404.6	2,160.0	1.47	33.3	238.5
+D+L					1.00	1.00	1.00	1.000	1.00	1.00	1.00			0.0	0.00	0.0	0.0
Length = 12.0 ft	1	0.466	0.316	1.00	1.00	1.00	1.00	1.000	1.00	1.00	1.00	12.30	1,118.3	2,400.0	3.68	83.7	265.0
+D+S					1.00	1.00	1.00	1.000	1.00	1.00	1.00			0.0	0.00	0.0	0.0
Length = 12.0 ft	1	0.345	0.268	1.15	1.00	1.00	1.00	1.000	1.00	1.00	1.00	10.47	951.6	2,760.0	3.59	81.5	304.8
+D+0.750L					1.00	1.00	1.00	1.000	1.00	1.00	1.00			0.0	0.00	0.0	0.0
Length = 12.0 ft	1	0.313	0.215	1.25	1.00	1.00	1.00	1.000	1.00	1.00	1.00	10.33	938.8	3,000.0	3.13	71.1	331.3
+D+0.750L+0.750S					1.00	1.00	1.00	1.000	1.00	1.00	1.00			0.0	0.00	0.0	0.0

Project Title:
Engineer:
Project ID:
Project Descr:

Wood Beam

Project File: 23-043.ec6

LIC# : KW-06016495, Build:20.23.08.30 CK Engineering LLC (c) ENERCALC INC 1983-2023

DESCRIPTION: HDR#9

Maximum Forces & Stresses for Load Combinations

Load Combination		Max Stress Ratios										Moment Values			Shear Values		
Segment Length	Span #	M	V	CD	CM	C_t	CLx	C_V	Cfu	C_i	C_r	M	fb	F'b	V	fv	F'v
Length = 12.0 ft	1	0.461	0.352	1.15	1.00	1.00	1.00	1.000	1.00	1.00	1.00	13.98	1,271.1	2,760.0	4.72	107.3	304.8
+1.157D+4.550E					1.00	1.00	1.00	1.000	1.00	1.00	1.00			0.0	0.00	0.0	0.0
Length = 12.0 ft	1	0.935	0.713	1.60	1.00	1.00	1.00	1.000	1.00	1.00	1.00	39.48	3,589.4	3,840.0	13.30	302.2	424.0
+1.118D+0.750L+0.750S+3.4					1.00	1.00	1.00	1.000	1.00	1.00	1.00			0.0	0.00	0.0	0.0
Length = 12.0 ft	1	0.944	0.729	1.60	1.00	1.00	1.00	1.000	1.00	1.00	1.00	39.88	3,625.7	3,840.0	13.59	308.9	424.0
+0.60D					1.00	1.00	1.00	1.000	1.00	1.00	1.00			0.0	0.00	0.0	0.0
Length = 12.0 ft	1	0.063	0.047	1.60	1.00	1.00	1.00	1.000	1.00	1.00	1.00	2.67	242.8	3,840.0	0.88	20.0	424.0
+0.4432D+4.550E					1.00	1.00	1.00	1.000	1.00	1.00	1.00			0.0	0.00	0.0	0.0
Length = 12.0 ft	1	0.865	0.657	1.60	1.00	1.00	1.00	1.000	1.00	1.00	1.00	36.55	3,322.4	3,840.0	12.25	278.5	424.0

Overall Maximum Deflections

Load Combination	Span	Max. "-" Defl	Location in Span	Load Combination	Max. "+" Defl	Location in Span
+D+0.750L+0.750S+0.5250E	1	0.3094	5.693		0.0000	0.000

Maximum Deflections for Load Combinations

Load Combination	Span	Max. Downward Defl		Location in Span		Max. Upward Defl		Location in Span	
D Only	1	0.0818	in	5.825	ft	0.0000	in	0.000	ft
+D+L	1	0.2266	in	5.956	ft	0.0000	in	0.000	ft
+D+S	1	0.1683	in	5.562	ft	0.0000	in	0.000	ft
+D+0.750L	1	0.1904	in	5.956	ft	0.0000	in	0.000	ft
+D+0.750L+0.750S	1	0.2549	in	5.781	ft	0.0000	in	0.000	ft
+D+0.70E	1	0.1545	in	5.606	ft	0.0000	in	0.000	ft
+D+0.750L+0.750S+0.5250E	1	0.3094	in	5.693	ft	0.0000	in	0.000	ft
+0.60D	1	0.0491	in	5.825	ft	0.0000	in	0.000	ft
+0.60D+0.70E	1	0.1219	in	5.518	ft	0.0000	in	0.000	ft
L Only	1	0.1448	in	6.044	ft	0.0000	in	0.000	ft
S Only	1	0.0869	in	5.299	ft	0.0000	in	0.000	ft
E Only	1	0.1044	in	5.299	ft	0.0000	in	0.000	ft

Vertical Reactions

Support notation : Far left is #1 Values in KIPS

Load Combination	Support 1	Support 2
Max Upward from all Load Conditions	6.549	4.220
Max Upward from Load Combinations	6.549	4.220
Max Upward from Load Cases	2.640	2.640
D Only	1.638	1.263
+D+L	4.278	3.903
+D+S	3.761	1.971
+D+0.750L	3.618	3.243
+D+0.750L+0.750S	5.210	3.774
+D+0.70E	3.423	1.858
+D+0.750L+0.750S+0.5250E	6.549	4.220
+0.60D	0.983	0.758
+0.60D+0.70E	2.768	1.353
L Only	2.640	2.640
S Only	2.123	0.708
E Only	2.550	0.850

Project Title:
Engineer:
Project ID:
Project Descr:

Wood Beam

Project File: 23-043.ec6

LIC# : KW-06016495, Build:20.23.08.30 CK Engineering LLC (c) ENERCALC INC 1983-2023

DESCRIPTION: HDR#10

CODE REFERENCES

Calculations per NDS 2018, IBC 2021, ASCE 7-16
Load Combination Set : IBC 2018

Material Properties

Analysis Method : Allowable Stress Design
Load Combination IBC 2018

Wood Species : DF/DF
Wood Grade : 24F-V4

Beam Bracing : Beam is Fully Braced against lateral-torsional buckling

Fb +	2,400.0 psi
Fb -	1,850.0 psi
Fc - Prll	1,650.0 psi
Fc - Perp	650.0 psi
Fv	265.0 psi
Ft	1,100.0 psi

E : Modulus of Elasticity

Ebend- xx	1,800.0 ksi
Eminbend - xx	950.0 ksi
Ebend- yy	1,600.0 ksi
Eminbend - yy	850.0 ksi
Density	31.210 pcf

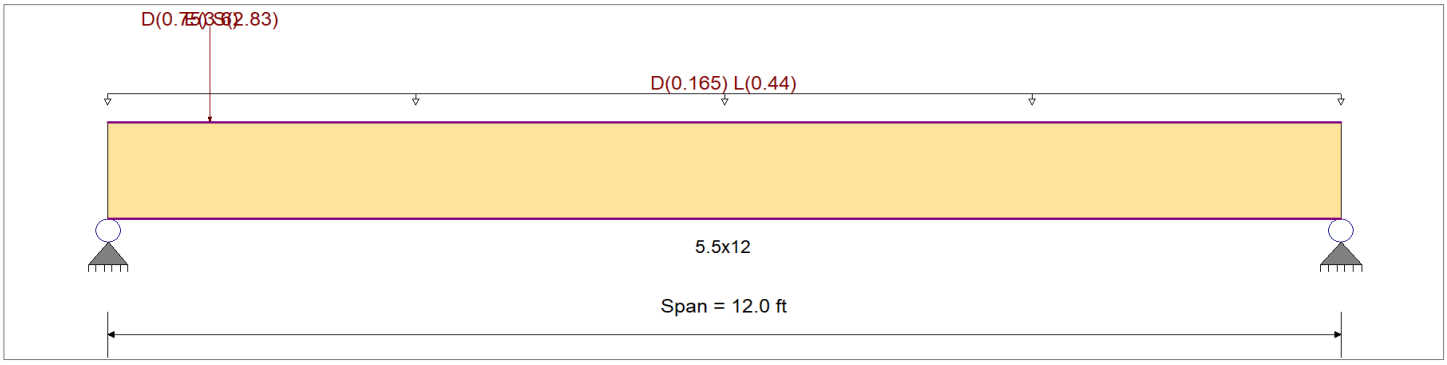

Applied Loads

Service loads entered. Load Factors will be applied for calculations.

Beam self weight calculated and added to loading
Uniform Load : D = 0.0150, L = 0.040 ksf, Tributary Width = 11.0 ft, (FLOOR)
Point Load : E = 3.60 k @ 1.0 ft, (SW2)
Point Load : D = 0.750, S = 2.830 k @ 1.0 ft, (HDR#4)

DESIGN SUMMARY

Design OK

Maximum Bending Stress Ratio	=	0.443 : 1	Maximum Shear Stress Ratio	=	0.903 : 1
Section used for this span		5.5x12	Section used for this span		5.5x12
fb: Actual	=	1,699.22 psi	fv: Actual	=	383.07 psi
F'b	=	3,840.00 psi	F'v	=	424.00 psi
Load Combination		+1.118D+0.750L+0.750S+3.413E	Load Combination		+1.157D+4.550E
Location of maximum on span	=	3.591 ft	Location of maximum on span	=	0.000 ft
Span # where maximum occurs	=	Span # 1	Span # where maximum occurs	=	Span # 1

Maximum Deflection

Max Downward Transient Deflection	0.145 in	Ratio =	994 >=360	Span: 1 : L Only
Max Upward Transient Deflection	0 in	Ratio =	0 <360	n/a
Max Downward Total Deflection	0.220 in	Ratio =	654 >=240	Span: 1 : +D+0.750L+0.750S+0.5250E
Max Upward Total Deflection	0 in	Ratio =	0 <240	n/a

Maximum Forces & Stresses for Load Combinations

Load Combination / Segment Length	Span #	Max Stress Ratios M	V	CD	CM	C_t	CLx	C_V	Cfu	C_i	C_r	Moment Values M	fb	F'b	Shear Values V	fv	F'v
D Only														0.0	0.00	0.0	0.0
Length = 12.0 ft	1	0.152	0.152	0.90	1.00	1.00	1.00	1.000	1.00	1.00	1.00	3.61	328.5	2,160.0	1.59	36.1	238.5
+D+L					1.00	1.00	1.00	1.000	1.00	1.00	1.00			0.0	0.00	0.0	0.0
Length = 12.0 ft	1	0.437	0.326	1.00	1.00	1.00	1.00	1.000	1.00	1.00	1.00	11.53	1,047.8	2,400.0	3.81	86.5	265.0
+D+S					1.00	1.00	1.00	1.000	1.00	1.00	1.00			0.0	0.00	0.0	0.0
Length = 12.0 ft	1	0.173	0.312	1.15	1.00	1.00	1.00	1.000	1.00	1.00	1.00	5.27	478.7	2,760.0	4.18	95.1	304.8
+D+0.750L					1.00	1.00	1.00	1.000	1.00	1.00	1.00			0.0	0.00	0.0	0.0
Length = 12.0 ft	1	0.289	0.223	1.25	1.00	1.00	1.00	1.000	1.00	1.00	1.00	9.55	867.8	3,000.0	3.25	73.9	331.3
+D+0.750L+0.750S					1.00	1.00	1.00	1.000	1.00	1.00	1.00			0.0	0.00	0.0	0.0

Project Title:
Engineer:
Project ID:
Project Descr:

Wood Beam

Project File: 23-043.ec6

LIC# : KW-06016495, Build:20.23.08.30 CK Engineering LLC (c) ENERCALC INC 1983-2023

DESCRIPTION: HDR#10

Maximum Forces & Stresses for Load Combinations

Load Combination / Segment Length	Span #	Max Stress Ratios M	V	CD	CM	C_t	CLx	C_V	Cfu	C_i	C_r	Moment Values M	fb	F'b	Shear Values V	fv	F'v
Length = 12.0 ft	1	0.351	0.388	1.15	1.00	1.00	1.00	1.000	1.00	1.00	1.00	10.66	969.1	2,760.0	5.20	118.1	304.8
+1.157D+4.550E					1.00	1.00	1.00	1.000	1.00	1.00	1.00			0.0	0.00	0.0	0.0
Length = 12.0 ft	1	0.401	0.903	1.60	1.00	1.00	1.00	1.000	1.00	1.00	1.00	16.95	1,540.7	3,840.0	16.85	383.1	424.0
+1.118D+0.750L+0.750S+3.4					1.00	1.00	1.00	1.000	1.00	1.00	1.00			0.0	0.00	0.0	0.0
Length = 12.0 ft	1	0.443	0.892	1.60	1.00	1.00	1.00	1.000	1.00	1.00	1.00	18.69	1,699.2	3,840.0	16.65	378.3	424.0
+0.60D					1.00	1.00	1.00	1.000	1.00	1.00	1.00			0.0	0.00	0.0	0.0
Length = 12.0 ft	1	0.051	0.051	1.60	1.00	1.00	1.00	1.000	1.00	1.00	1.00	2.17	197.1	3,840.0	0.95	21.7	424.0
+0.4432D+4.550E					1.00	1.00	1.00	1.000	1.00	1.00	1.00			0.0	0.00	0.0	0.0
Length = 12.0 ft	1	0.373	0.843	1.60	1.00	1.00	1.00	1.000	1.00	1.00	1.00	15.75	1,431.8	3,840.0	15.72	357.3	424.0

Overall Maximum Deflections

Load Combination	Span	Max. "-" Defl	Location in Span	Load Combination	Max. "+" Defl	Location in Span
+D+0.750L+0.750S+0.5250E	1	0.2199	5.825		0.0000	0.000

Maximum Deflections for Load Combinations

Load Combination	Span	Max. Downward Defl		Location in Span		Max. Upward Defl		Location in Span	
D Only	1	0.0672	in	5.912	ft	0.0000	in	0.000	ft
+D+L	1	0.2121	in	6.000	ft	0.0000	in	0.000	ft
+D+S	1	0.0984	in	5.693	ft	0.0000	in	0.000	ft
+D+0.750L	1	0.1758	in	6.000	ft	0.0000	in	0.000	ft
+D+0.750L+0.750S	1	0.1991	in	5.869	ft	0.0000	in	0.000	ft
+D+0.70E	1	0.0950	in	5.693	ft	0.0000	in	0.000	ft
+D+0.750L+0.750S+0.5250E	1	0.2199	in	5.825	ft	0.0000	in	0.000	ft
+0.60D	1	0.0403	in	5.912	ft	0.0000	in	0.000	ft
+0.60D+0.70E	1	0.0682	in	5.606	ft	0.0000	in	0.000	ft
L Only	1	0.1448	in	6.044	ft	0.0000	in	0.000	ft
S Only	1	0.0316	in	5.124	ft	0.0000	in	0.000	ft
E Only	1	0.0402	in	5.124	ft	0.0000	in	0.000	ft

Vertical Reactions

Support notation : Far left is #1 Values in KIPS

Load Combination	Support 1	Support 2
Max Upward from all Load Conditions	7.421	3.778
Max Upward from Load Combinations	7.421	3.778
Max Upward from Load Cases	3.300	2.640
D Only	1.763	1.138
+D+L	4.403	3.778
+D+S	4.357	1.374
+D+0.750L	3.743	3.118
+D+0.750L+0.750S	5.689	3.295
+D+0.70E	4.073	1.348
+D+0.750L+0.750S+0.5250E	7.421	3.453
+0.60D	1.058	0.683
+0.60D+0.70E	3.368	0.893
L Only	2.640	2.640
S Only	2.594	0.236
E Only	3.300	0.300

Project Title:
Engineer:
Project ID:
Project Descr:

Wood Beam

Project File: 23-043.ec6

LIC# : KW-06016495, Build:20.23.08.30 CK Engineering LLC (c) ENERCALC INC 1983-2023

DESCRIPTION: HDR#11

CODE REFERENCES

Calculations per NDS 2018, IBC 2021, ASCE 7-16
Load Combination Set : IBC 2018

Material Properties

Analysis Method : Allowable Stress Design
Load Combination IBC 2018

Wood Species : DF/DF
Wood Grade : 24F-V4

Beam Bracing : Beam is Fully Braced against lateral-torsional buckling

Fb +	2,400.0 psi
Fb -	1,850.0 psi
Fc - Prll	1,650.0 psi
Fc - Perp	650.0 psi
Fv	265.0 psi
Ft	1,100.0 psi

E : Modulus of Elasticity

Ebend- xx	1,800.0 ksi
Eminbend - xx	950.0 ksi
Ebend- yy	1,600.0 ksi
Eminbend - yy	850.0 ksi
Density	31.210 pcf

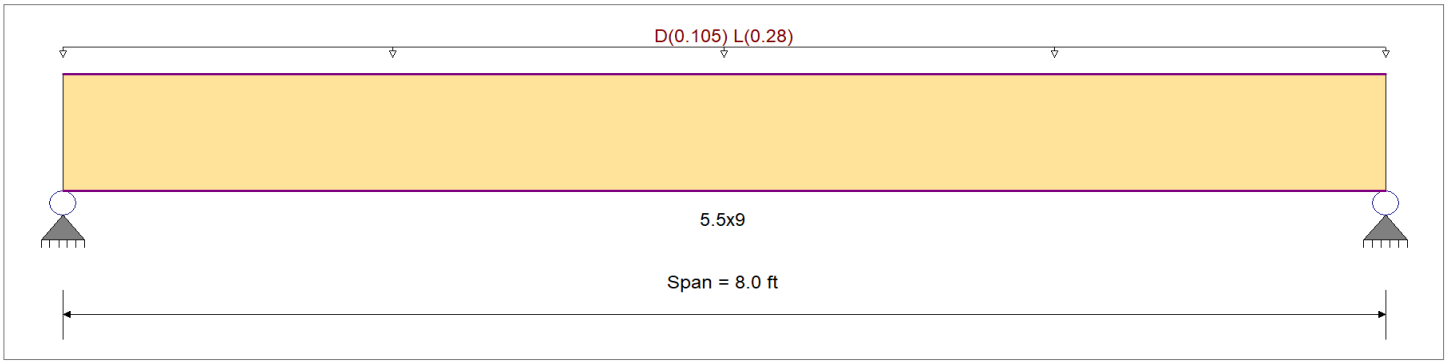

Applied Loads

Service loads entered. Load Factors will be applied for calculations.

Beam self weight calculated and added to loading
Uniform Load : D = 0.0150, L = 0.040 ksf, Tributary Width = 7.0 ft, (FLOOR)

DESIGN SUMMARY

Design OK

Maximum Bending Stress Ratio	=	0.213 : 1	Maximum Shear Stress Ratio	=	0.148 : 1
Section used for this span		5.5x9	Section used for this span		5.5x9
fb: Actual	=	511.65 psi	fv: Actual	=	39.21 psi
F'b	=	2,400.00 psi	F'v	=	265.00 psi
Load Combination		+D+L	Load Combination		+D+L
Location of maximum on span	=	4.000 ft	Location of maximum on span	=	7.270 ft
Span # where maximum occurs	=	Span # 1	Span # where maximum occurs	=	Span # 1

Maximum Deflection

Max Downward Transient Deflection	0.043 in	Ratio =	2224 >=360	Span: 1 : L Only
Max Upward Transient Deflection	0 in	Ratio =	0 <360	n/a
Max Downward Total Deflection	0.061 in	Ratio =	1573 >=240	Span: 1 : +D+L
Max Upward Total Deflection	0 in	Ratio =	0 <240	n/a

Maximum Forces & Stresses for Load Combinations

Load Combination / Segment Length	Span #	Max Stress Ratios M	V	CD	CM	C_t	CLx	C_V	Cfu	C_i	C_r	Moment Values M	fb	F'b	Shear Values V	fv	F'v
D Only														0.0	0.00	0.0	0.0
Length = 8.0 ft	1	0.069	0.048	0.90	1.00	1.00	1.00	1.000	1.00	1.00	1.00	0.93	149.6	2,160.0	0.38	11.5	238.5
+D+L					1.00	1.00	1.00	1.000	1.00	1.00	1.00			0.0	0.00	0.0	0.0
Length = 8.0 ft	1	0.213	0.148	1.00	1.00	1.00	1.00	1.000	1.00	1.00	1.00	3.17	511.6	2,400.0	1.29	39.2	265.0
+D+0.750L					1.00	1.00	1.00	1.000	1.00	1.00	1.00			0.0	0.00	0.0	0.0
Length = 8.0 ft	1	0.140	0.097	1.25	1.00	1.00	1.00	1.000	1.00	1.00	1.00	2.61	421.1	3,000.0	1.07	32.3	331.3
+1.157D					1.00	1.00	1.00	1.000	1.00	1.00	1.00			0.0	0.00	0.0	0.0
Length = 8.0 ft	1	0.045	0.031	1.60	1.00	1.00	1.00	1.000	1.00	1.00	1.00	1.07	173.1	3,840.0	0.44	13.3	424.0
+1.118D+0.750L					1.00	1.00	1.00	1.000	1.00	1.00	1.00			0.0	0.00	0.0	0.0
Length = 8.0 ft	1	0.114	0.079	1.60	1.00	1.00	1.00	1.000	1.00	1.00	1.00	2.71	438.7	3,840.0	1.11	33.6	424.0

Project Title:
Engineer:
Project ID:
Project Descr:

Wood Beam

Project File: 23-043.ec6

LIC# : KW-06016495, Build:20.23.08.30 CK Engineering LLC (c) ENERCALC INC 1983-2023

DESCRIPTION: HDR#11

Maximum Forces & Stresses for Load Combinations

Load Combination / Segment Length	Span #	Max Stress Ratios M	V	CD	CM	C_t	CLx	C_V	Cfu	C_i	C_r	Moment Values M	fb	F'b	Shear Values V	fv	F'v
+0.60D					1.00	1.00	1.00	1.000	1.00	1.00	1.00			0.0	0.00	0.0	0.0
Length = 8.0 ft	1	0.023	0.016	1.60	1.00	1.00	1.00	1.000	1.00	1.00	1.00	0.56	89.8	3,840.0	0.23	6.9	424.0
+0.4432D					1.00	1.00	1.00	1.000	1.00	1.00	1.00			0.0	0.00	0.0	0.0
Length = 8.0 ft	1	0.017	0.012	1.60	1.00	1.00	1.00	1.000	1.00	1.00	1.00	0.41	66.3	3,840.0	0.17	5.1	424.0

Overall Maximum Deflections

Load Combination	Span	Max. "-" Defl	Location in Span	Load Combination	Max. "+" Defl	Location in Span
+D+L	1	0.0610	4.029		0.0000	0.000

Maximum Deflections for Load Combinations

Load Combination	Span	Max. Downward Defl		Location in Span		Max. Upward Defl		Location in Span	
D Only	1	0.0178	in	4.029	ft	0.0000	in	0.000	ft
+D+L	1	0.0610	in	4.029	ft	0.0000	in	0.000	ft
+D+0.750L	1	0.0502	in	4.029	ft	0.0000	in	0.000	ft
+0.60D	1	0.0107	in	4.029	ft	0.0000	in	0.000	ft
L Only	1	0.0432	in	4.029	ft	0.0000	in	0.000	ft

Vertical Reactions

Support notation : Far left is #1 Values in KIPS

Load Combination	Support 1	Support 2
Max Upward from all Load Conditions	1.583	1.583
Max Upward from Load Combinations	1.583	1.583
Max Upward from Load Cases	1.120	1.120
D Only	0.463	0.463
+D+L	1.583	1.583
+D+0.750L	1.303	1.303
+0.60D	0.278	0.278
L Only	1.120	1.120

Project Title:
Engineer:
Project ID:
Project Descr:

Wood Beam

Project File: 23-043.ec6

LIC# : KW-06016495, Build:20.23.08.30 CK Engineering LLC (c) ENERCALC INC 1983-2023

DESCRIPTION: BM#0.1

CODE REFERENCES

Calculations per NDS 2018, IBC 2021, ASCE 7-16
Load Combination Set : IBC 2018

Material Properties

Analysis Method : Allowable Stress Design
Load Combination IBC 2018

Wood Species : Douglas Fir-Larch (North)
Wood Grade : No.2

Beam Bracing : Beam is Fully Braced against lateral-torsional buckling

Fb +	875.0 psi
Fb -	875.0 psi
Fc - Prll	600.0 psi
Fc - Perp	625.0 psi
Fv	170.0 psi
Ft	425.0 psi

E : Modulus of Elasticity

Ebend- xx	1,300.0 ksi
Eminbend - xx	470.0 ksi
Density	30.590 pcf

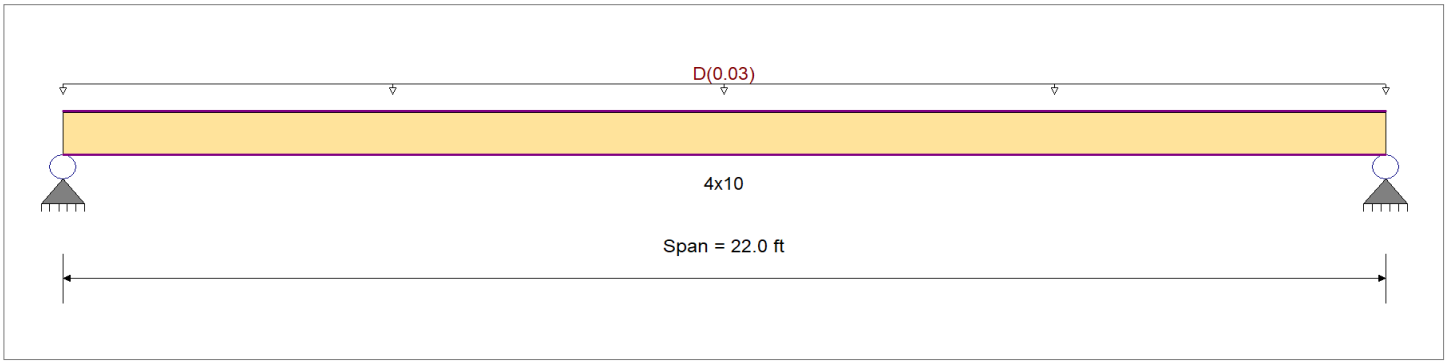

Applied Loads

Service loads entered. Load Factors will be applied for calculations.

Beam self weight calculated and added to loading
Uniform Load : D = 0.0150 ksf, Tributary Width = 2.0 ft, (ROOF)

DESIGN SUMMARY

Design OK

Maximum Bending Stress Ratio	=	0.710 : 1	Maximum Shear Stress Ratio	=	0.143 : 1
Section used for this span		4x10	Section used for this span		4x10
fb: Actual	=	536.41 psi	fv: Actual	=	17.56 psi
F'b	=	756.00 psi	F'v	=	122.40 psi
Load Combination		D Only	Load Combination		D Only
Location of maximum on span	=	11.000 ft	Location of maximum on span	=	21.277 ft
Span # where maximum occurs	=	Span # 1	Span # where maximum occurs	=	Span # 1

Maximum Deflection

Max Downward Transient Deflection	0 in	Ratio =	0 <360	n/a
Max Upward Transient Deflection	0 in	Ratio =	0 <360	n/a
Max Downward Total Deflection	0.686 in	Ratio =	384 >=240	Span: 1 : D Only
Max Upward Total Deflection	0 in	Ratio =	0 <240	n/a

Maximum Forces & Stresses for Load Combinations

Load Combination / Segment Length	Span #	Max Stress Ratios M	V	CD	CM	C_t	CLx	C_F	Cfu	C_i	C_r	Moment Values M	fb	F'b	Shear Values V	fv	F'v
D Only														0.0	0.00	0.0	0.0
Length = 22.0 ft	1	0.710	0.143	0.90	1.00	1.00	1.00	1.200	1.00	0.80	1.00	2.23	536.4	756.0	0.38	17.6	122.4
+0.60D					1.00	1.00	1.00	1.200	1.00	0.80	1.00			0.0	0.00	0.0	0.0
Length = 22.0 ft	1	0.239	0.048	1.60	1.00	1.00	1.00	1.200	1.00	0.80	1.00	1.34	321.8	1,344.0	0.23	10.5	217.6

Overall Maximum Deflections

Load Combination	Span	Max. "-" Defl	Location in Span	Load Combination	Max. "+" Defl	Location in Span
D Only	1	0.6858	11.080		0.0000	0.000

Maximum Deflections for Load Combinations

Load Combination	Span	Max. Downward Defl		Location in Span	Max. Upward Defl		Location in Span	
D Only	1	0.6858	in	11.080 ft	0.0000	in	0.000	ft
+0.60D	1	0.4115	in	11.080 ft	0.0000	in	0.000	ft

Wood Beam

LIC# : KW-06016495, Build:20.23.08.30 CK Engineering LLC (c) ENERCALC INC 1983-2023

DESCRIPTION: BM#0.1

Vertical Reactions

Support notation : Far left is #1 Values in KIPS

Load Combination	Support 1	Support 2
Max Upward from all Load Conditions	0.406	0.406
Max Upward from Load Combinations	0.243	0.243
Max Upward from Load Cases	0.406	0.406
D Only	0.406	0.406
+0.60D	0.243	0.243

Project Title:
Engineer:
Project ID:
Project Descr:

Wood Beam

Project File: 23-043.ec6

LIC# : KW-06016495, Build:20.23.08.30 CK Engineering LLC (c) ENERCALC INC 1983-2023

DESCRIPTION: BM#0.2

CODE REFERENCES

Calculations per NDS 2018, IBC 2021, ASCE 7-16
Load Combination Set : IBC 2018

Material Properties

Analysis Method : Allowable Stress Design
Load Combination IBC 2018

Wood Species : DF/DF
Wood Grade : 24F-V4

Beam Bracing : Beam is Fully Braced against lateral-torsional buckling

Fb +	2,400.0 psi
Fb -	1,850.0 psi
Fc - Prll	1,650.0 psi
Fc - Perp	650.0 psi
Fv	265.0 psi
Ft	1,100.0 psi

E : Modulus of Elasticity

Ebend- xx	1,800.0 ksi
Eminbend - xx	950.0 ksi
Ebend- yy	1,600.0 ksi
Eminbend - yy	850.0 ksi
Density	31.210 pcf

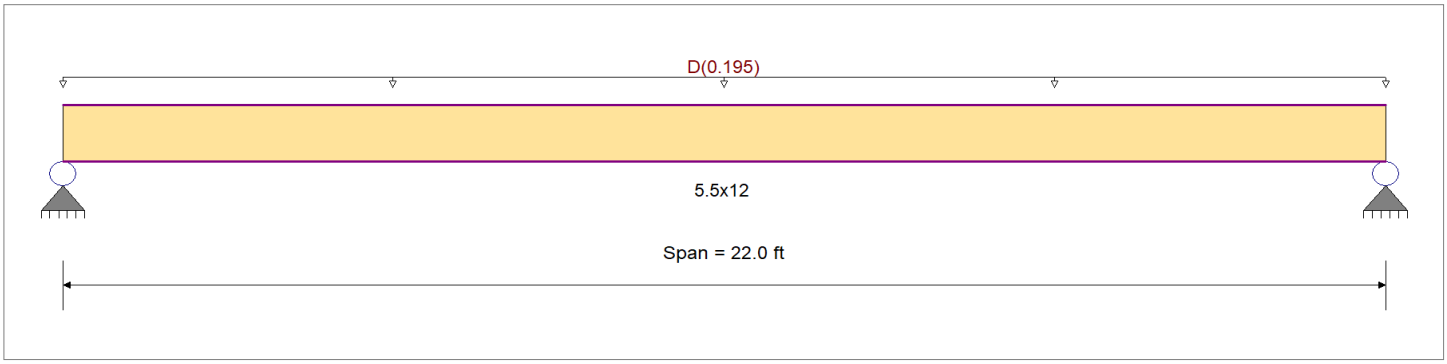

Applied Loads

Service loads entered. Load Factors will be applied for calculations.

Beam self weight calculated and added to loading
Uniform Load : D = 0.0150 ksf, Tributary Width = 13.0 ft, (ROOF)

DESIGN SUMMARY

Design OK

Maximum Bending Stress Ratio	=	0.539 : 1	Maximum Shear Stress Ratio	=	0.200 : 1
Section used for this span		5.5x12	Section used for this span		5.5x12
fb: Actual	=	1,151.18 psi	fv: Actual	=	47.74 psi
F'b	=	2,134.85 psi	F'v	=	238.50 psi
Load Combination		D Only	Load Combination		D Only
Location of maximum on span	=	11.000 ft	Location of maximum on span	=	21.036 ft
Span # where maximum occurs	=	Span # 1	Span # where maximum occurs	=	Span # 1

Maximum Deflection

Max Downward Transient Deflection	0 in	Ratio =	0 <360	n/a
Max Upward Transient Deflection	0 in	Ratio =	0 <360	n/a
Max Downward Total Deflection	0.778 in	Ratio =	339 >=240	Span: 1 : D Only
Max Upward Total Deflection	0 in	Ratio =	0 <240	n/a

Maximum Forces & Stresses for Load Combinations

Load Combination / Segment Length	Span #	Max Stress Ratios M	V	CD	CM	C_t	CLx	C_V	Cfu	C_i	C_r	Moment Values M	fb	F'b	Shear Values V	fv	F'v
D Only														0.0	0.00	0.0	0.0
Length = 22.0 ft	1	0.539	0.200	0.90	1.00	1.00	1.00	0.988	1.00	1.00	1.00	12.66	1,151.2	2,134.8	2.10	47.7	238.5
+0.60D					1.00	1.00	1.00	0.988	1.00	1.00	1.00			0.0	0.00	0.0	0.0
Length = 22.0 ft	1	0.182	0.068	1.60	1.00	1.00	1.00	0.988	1.00	1.00	1.00	7.60	690.7	3,795.3	1.26	28.6	424.0

Overall Maximum Deflections

Load Combination	Span	Max. "-" Defl	Location in Span	Load Combination	Max. "+" Defl	Location in Span
D Only	1	0.7784	11.080		0.0000	0.000

Maximum Deflections for Load Combinations

Load Combination	Span	Max. Downward Defl		Location in Span	Max. Upward Defl		Location in Span	
D Only	1	0.7784	in	11.080 ft	0.0000	in	0.000	ft
+0.60D	1	0.4670	in	11.080 ft	0.0000	in	0.000	ft

Wood Beam

LIC# : KW-06016495, Build:20.23.08.30 CK Engineering LLC (c) ENERCALC INC 1983-2023

DESCRIPTION: BM#0.2

Vertical Reactions

Support notation : Far left is #1 Values in KIPS

Load Combination	Support 1	Support 2
Max Upward from all Load Conditions	2.302	2.302
Max Upward from Load Combinations	1.381	1.381
Max Upward from Load Cases	2.302	2.302
D Only	2.302	2.302
+0.60D	1.381	1.381

Project Title:
Engineer:
Project ID:
Project Descr:

Wood Beam

Project File: 23-043.ec6

LIC# : KW-06016495, Build:20.23.08.30 CK Engineering LLC (c) ENERCALC INC 1983-2023

DESCRIPTION: BM#0.3

CODE REFERENCES

Calculations per NDS 2018, IBC 2021, ASCE 7-16
Load Combination Set : IBC 2018

Material Properties

Analysis Method :	Allowable Stress Design	Fb +	875.0 psi	*E : Modulus of Elasticity*	
Load Combination	IBC 2018	Fb -	875.0 psi	Ebend- xx	1,300.0 ksi
		Fc - Prll	600.0 psi	Eminbend - xx	470.0 ksi
Wood Species :	Douglas Fir-Larch (North)	Fc - Perp	625.0 psi		
Wood Grade :	No.2	Fv	170.0 psi		
		Ft	425.0 psi	Density	30.590 pcf
Beam Bracing :	Beam is Fully Braced against lateral-torsional buckling				

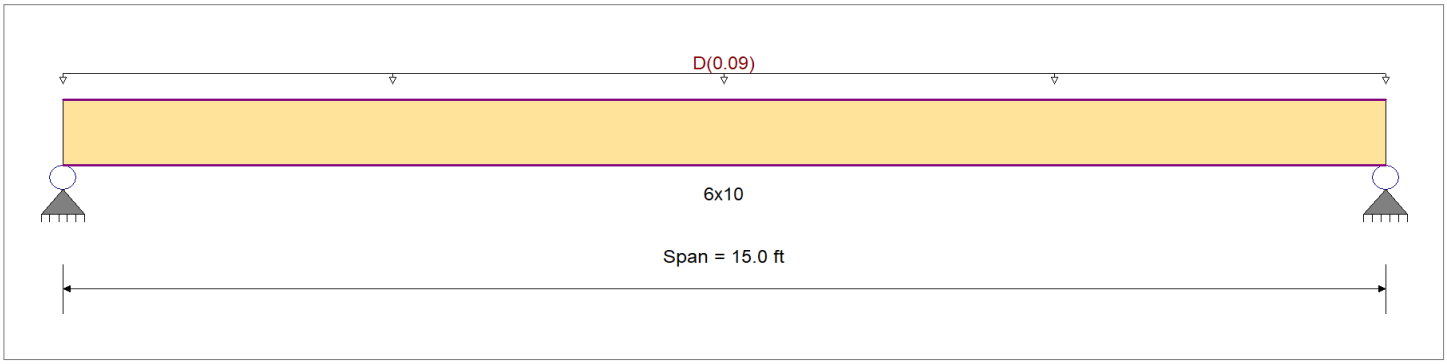

Applied Loads

Service loads entered. Load Factors will be applied for calculations.

Beam self weight calculated and added to loading
Uniform Load : D = 0.0150 ksf, Tributary Width = 6.0 ft, (ROOF)

DESIGN SUMMARY

Design OK

Maximum Bending Stress Ratio	=	0.655 : 1	Maximum Shear Stress Ratio	=	0.160 : 1
Section used for this span		6x10	Section used for this span		6x10
fb: Actual	=	412.44 psi	fv: Actual	=	19.54 psi
F'b	=	630.00 psi	F'v	=	122.40 psi
Load Combination		D Only	Load Combination		D Only
Location of maximum on span	=	7.500 ft	Location of maximum on span	=	14.234 ft
Span # where maximum occurs	=	Span # 1	Span # where maximum occurs	=	Span # 1

Maximum Deflection

Max Downward Transient Deflection	0 in	Ratio =	0 <360	n/a
Max Upward Transient Deflection	0 in	Ratio =	0 <360	n/a
Max Downward Total Deflection	0.239 in	Ratio =	754 >=240	Span: 1 : D Only
Max Upward Total Deflection	0 in	Ratio =	0 <240	n/a

Maximum Forces & Stresses for Load Combinations

Load Combination		Max Stress Ratios										Moment Values			Shear Values		
Segment Length	Span #	M	V	CD	CM	C_t	CLx	C_F	Cfu	C_i	C_r	M	fb	F'b	V	fv	F'v
D Only														0.0	0.00	0.0	0.0
Length = 15.0 ft	1	0.655	0.160	0.90	1.00	1.00	1.00	1.000	1.00	0.80	1.00	2.84	412.4	630.0	0.68	19.5	122.4
+0.60D					1.00	1.00	1.00	1.000	1.00	0.80	1.00			0.0	0.00	0.0	0.0
Length = 15.0 ft	1	0.221	0.054	1.60	1.00	1.00	1.00	1.000	1.00	0.80	1.00	1.71	247.5	1,120.0	0.41	11.7	217.6

Overall Maximum Deflections

Load Combination	Span	Max. "-" Defl	Location in Span	Load Combination	Max. "+" Defl	Location in Span
D Only	1	0.2387	7.555		0.0000	0.000

Maximum Deflections for Load Combinations

Load Combination	Span	Max. Downward Defl		Location in Span	Max. Upward Defl		Location in Span	
D Only	1	0.2387	in	7.555 ft	0.0000	in	0.000	ft
+0.60D	1	0.1432	in	7.555 ft	0.0000	in	0.000	ft

Wood Beam

LIC# : KW-06016495, Build:20.23.08.30 CK Engineering LLC (c) ENERCALC INC 1983-2023

DESCRIPTION: BM#0.3

Vertical Reactions

Support notation : Far left is #1 Values in KIPS

Load Combination	Support 1	Support 2
Max Upward from all Load Conditions	0.758	0.758
Max Upward from Load Combinations	0.455	0.455
Max Upward from Load Cases	0.758	0.758
D Only	0.758	0.758
+0.60D	0.455	0.455

Project Title:
Engineer:
Project ID:
Project Descr:

Wood Beam

Project File: 23-043.ec6

LIC# : KW-06016495, Build:20.23.08.30 CK Engineering LLC (c) ENERCALC INC 1983-2023

DESCRIPTION: BM#1

CODE REFERENCES

Calculations per NDS 2018, IBC 2021, ASCE 7-16
Load Combination Set : IBC 2018

Material Properties

Analysis Method : Allowable Stress Design
Load Combination IBC 2018

Wood Species : iLevel Truss Joist
Wood Grade : Parallam PSL 2.0E

Beam Bracing : Beam is Fully Braced against lateral-torsional buckling

Fb +	2,900.0 psi
Fb -	2,900.0 psi
Fc - Prll	2,900.0 psi
Fc - Perp	750.0 psi
Fv	290.0 psi
Ft	2,025.0 psi

E : Modulus of Elasticity

Ebend- xx	2,000.0 ksi
Eminbend - xx	1,016.54 ksi
Density	45.070 pcf

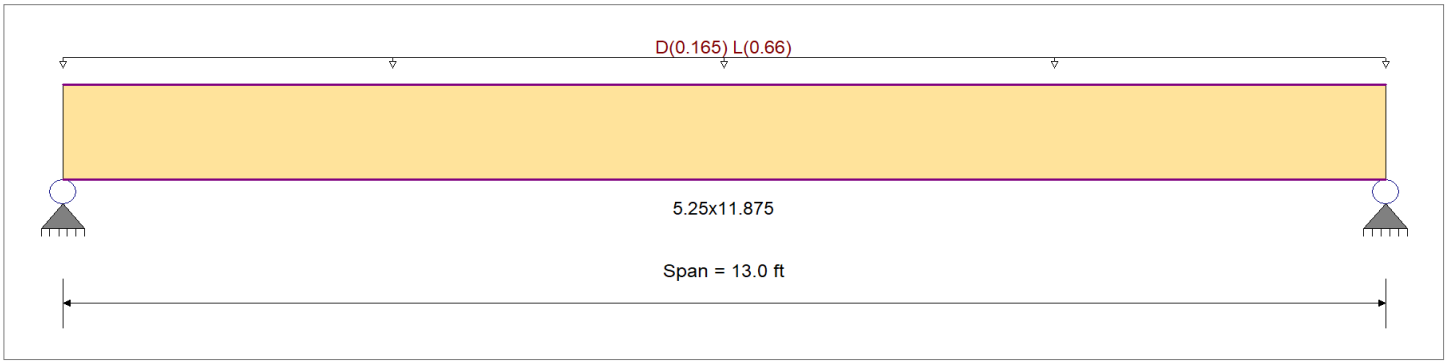

Applied Loads

Service loads entered. Load Factors will be applied for calculations.

Beam self weight calculated and added to loading
Uniform Load : D = 0.0150, L = 0.060 ksf, Tributary Width = 11.0 ft, (ROOF)

DESIGN SUMMARY

Design OK

Maximum Bending Stress Ratio	=	0.598 : 1	Maximum Shear Stress Ratio	=	0.389 : 1
Section used for this span		5.25x11.875	Section used for this span		5.25x11.875
fb: Actual	=	1,735.04 psi	fv: Actual	=	112.79 psi
F'b	=	2,903.37 psi	F'v	=	290.00 psi
Load Combination		+D+L	Load Combination		+D+L
Location of maximum on span	=	6.500 ft	Location of maximum on span	=	12.051 ft
Span # where maximum occurs	=	Span # 1	Span # where maximum occurs	=	Span # 1

Maximum Deflection

Max Downward Transient Deflection	0.291 in	Ratio =	535 >=360	Span: 1 : L Only
Max Upward Transient Deflection	0 in	Ratio =	0 <360	n/a
Max Downward Total Deflection	0.373 in	Ratio =	418 >=240	Span: 1 : +D+L
Max Upward Total Deflection	0 in	Ratio =	0 <240	n/a

Maximum Forces & Stresses for Load Combinations

Load Combination / Segment Length	Span #	Max Stress Ratios M	V	CD	CM	C_t	CLx	C_F	Cfu	C_i	C_r	Moment Values M	fb	F'b	Shear Values V	fv	F'v
D Only														0.0	0.00	0.0	0.0
Length = 13.0 ft	1	0.145	0.094	0.90	1.00	1.00	1.00	1.001	1.00	1.00	1.00	3.90	379.1	2,613.0	1.02	24.6	261.0
+D+L					1.00	1.00	1.00	1.001	1.00	1.00	1.00			0.0	0.00	0.0	0.0
Length = 13.0 ft	1	0.598	0.389	1.00	1.00	1.00	1.00	1.001	1.00	1.00	1.00	17.84	1,735.0	2,903.4	4.69	112.8	290.0
+D+0.750L					1.00	1.00	1.00	1.001	1.00	1.00	1.00			0.0	0.00	0.0	0.0
Length = 13.0 ft	1	0.385	0.250	1.25	1.00	1.00	1.00	1.001	1.00	1.00	1.00	14.35	1,396.0	3,629.2	3.77	90.8	362.5
+0.60D					1.00	1.00	1.00	1.001	1.00	1.00	1.00			0.0	0.00	0.0	0.0
Length = 13.0 ft	1	0.049	0.032	1.60	1.00	1.00	1.00	1.001	1.00	1.00	1.00	2.34	227.4	4,645.4	0.61	14.8	464.0

Project Title:
Engineer:
Project ID:
Project Descr:

Wood Beam

Project File: 23-043.ec6

LIC# : KW-06016495, Build:20.23.08.30 CK Engineering LLC (c) ENERCALC INC 1983-2023

DESCRIPTION: BM#1

Overall Maximum Deflections

Load Combination	Span	Max. "-" Defl	Location in Span	Load Combination	Max. "+" Defl	Location in Span
+D+L	1	0.3725	6.547		0.0000	0.000

Maximum Deflections for Load Combinations

Load Combination	Span	Max. Downward Defl		Location in Span	Max. Upward Defl		Location in Span	
D Only	1	0.0814	in	6.547 ft	0.0000	in	0.000	ft
+D+L	1	0.3725	in	6.547 ft	0.0000	in	0.000	ft
+D+0.750L	1	0.2998	in	6.547 ft	0.0000	in	0.000	ft
+0.60D	1	0.0488	in	6.547 ft	0.0000	in	0.000	ft
L Only	1	0.2912	in	6.547 ft	0.0000	in	0.000	ft

Vertical Reactions

Support notation : Far left is #1 Values in KIPS

Load Combination	Support 1	Support 2
Max Upward from all Load Conditions	5.489	5.489
Max Upward from Load Combinations	5.489	5.489
Max Upward from Load Cases	4.290	4.290
D Only	1.199	1.199
+D+L	5.489	5.489
+D+0.750L	4.417	4.417
+0.60D	0.720	0.720
L Only	4.290	4.290

Project Title:
Engineer:
Project ID:
Project Descr:

Wood Beam

Project File: 23-043.ec6

LIC# : KW-06016495, Build:20.23.08.30 CK Engineering LLC (c) ENERCALC INC 1983-2023

DESCRIPTION: BM#2

CODE REFERENCES

Calculations per NDS 2018, IBC 2021, ASCE 7-16
Load Combination Set : IBC 2018

Material Properties

Analysis Method : Allowable Stress Design
Load Combination IBC 2018

Wood Species : iLevel Truss Joist
Wood Grade : Parallam PSL 2.0E

Beam Bracing : Beam is Fully Braced against lateral-torsional buckling

Fb +	2,900.0 psi
Fb -	2,900.0 psi
Fc - Prll	2,900.0 psi
Fc - Perp	750.0 psi
Fv	290.0 psi
Ft	2,025.0 psi

E : Modulus of Elasticity

Ebend- xx	2,000.0 ksi
Eminbend - xx	1,016.54 ksi
Density	45.070 pcf

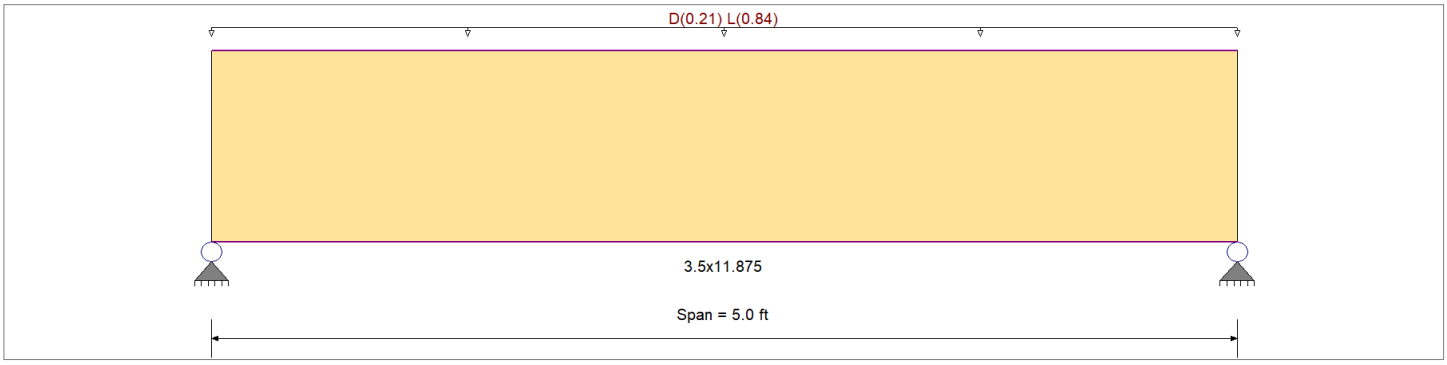

Applied Loads

Service loads entered. Load Factors will be applied for calculations.

Beam self weight calculated and added to loading
Uniform Load : D = 0.0150, L = 0.060 ksf, Tributary Width = 14.0 ft, (ROOF)

DESIGN SUMMARY

Design OK

Maximum Bending Stress Ratio	=	0.167 : 1	Maximum Shear Stress Ratio	=	0.200 : 1
Section used for this span		3.5x11.875	Section used for this span		3.5x11.875
fb: Actual	=	484.60 psi	fv: Actual	=	58.11 psi
F'b	=	2,903.37 psi	F'v	=	290.00 psi
Load Combination		+D+L	Load Combination		+D+L
Location of maximum on span	=	2.500 ft	Location of maximum on span	=	0.000 ft
Span # where maximum occurs	=	Span # 1	Span # where maximum occurs	=	Span # 1

Maximum Deflection

Max Downward Transient Deflection	0.012 in	Ratio =	4932 >=360	Span: 1 : L Only
Max Upward Transient Deflection	0 in	Ratio =	0 <360	n/a
Max Downward Total Deflection	0.015 in	Ratio =	3897 >=240	Span: 1 : +D+L
Max Upward Total Deflection	0 in	Ratio =	0 <240	n/a

Maximum Forces & Stresses for Load Combinations

Load Combination / Segment Length	Span #	Max Stress Ratios M	V	CD	CM	C_t	CLx	C_F	Cfu	C_i	C_r	Moment Values M	fb	F'b	Shear Values V	fv	F'v
D Only														0.0	0.00	0.0	0.0
Length = 5.0 ft	1	0.039	0.047	0.90	1.00	1.00	1.00	1.001	1.00	1.00	1.00	0.70	101.7	2,613.0	0.34	12.2	261.0
+D+L					1.00	1.00	1.00	1.001	1.00	1.00	1.00			0.0	0.00	0.0	0.0
Length = 5.0 ft	1	0.167	0.200	1.00	1.00	1.00	1.00	1.001	1.00	1.00	1.00	3.32	484.6	2,903.4	1.61	58.1	290.0
+D+0.750L					1.00	1.00	1.00	1.001	1.00	1.00	1.00			0.0	0.00	0.0	0.0
Length = 5.0 ft	1	0.107	0.129	1.25	1.00	1.00	1.00	1.001	1.00	1.00	1.00	2.67	388.9	3,629.2	1.29	46.6	362.5
+0.60D					1.00	1.00	1.00	1.001	1.00	1.00	1.00			0.0	0.00	0.0	0.0
Length = 5.0 ft	1	0.013	0.016	1.60	1.00	1.00	1.00	1.001	1.00	1.00	1.00	0.42	61.0	4,645.4	0.20	7.3	464.0

Wood Beam

LIC# : KW-06016495, Build:20.23.08.30 CK Engineering LLC (c) ENERCALC INC 1983-2023

DESCRIPTION: BM#2

Overall Maximum Deflections

Load Combination	Span	Max. "-" Defl	Location in Span	Load Combination	Max. "+" Defl	Location in Span
+D+L	1	0.0154	2.518		0.0000	0.000

Maximum Deflections for Load Combinations

Load Combination	Span	Max. Downward Defl		Location in Span	Max. Upward Defl		Location in Span	
D Only	1	0.0032	in	2.518 ft	0.0000	in	0.000	ft
+D+L	1	0.0154	in	2.518 ft	0.0000	in	0.000	ft
+D+0.750L	1	0.0124	in	2.518 ft	0.0000	in	0.000	ft
+0.60D	1	0.0019	in	2.518 ft	0.0000	in	0.000	ft
L Only	1	0.0122	in	2.518 ft	0.0000	in	0.000	ft

Vertical Reactions

Support notation : Far left is #1 Values in KIPS

Load Combination	Support 1	Support 2
Max Upward from all Load Conditions	2.658	2.658
Max Upward from Load Combinations	2.658	2.658
Max Upward from Load Cases	2.100	2.100
D Only	0.558	0.558
+D+L	2.658	2.658
+D+0.750L	2.133	2.133
+0.60D	0.335	0.335
L Only	2.100	2.100

Project Title:
Engineer:
Project ID:
Project Descr:

Wood Beam

Project File: 23-043.ec6

LIC# : KW-06016495, Build:20.23.08.30 CK Engineering LLC (c) ENERCALC INC 1983-2023

DESCRIPTION: BM#3

CODE REFERENCES

Calculations per NDS 2018, IBC 2021, ASCE 7-16
Load Combination Set : IBC 2018

Material Properties

Analysis Method : Allowable Stress Design
Load Combination IBC 2018

Wood Species : iLevel Truss Joist
Wood Grade : Parallam PSL 2.0E

Beam Bracing : Beam is Fully Braced against lateral-torsional buckling

Fb +	2,900.0 psi
Fb -	2,900.0 psi
Fc - Prll	2,900.0 psi
Fc - Perp	750.0 psi
Fv	290.0 psi
Ft	2,025.0 psi

E : Modulus of Elasticity

Ebend- xx	2,000.0 ksi
Eminbend - xx	1,016.54 ksi
Density	45.070 pcf

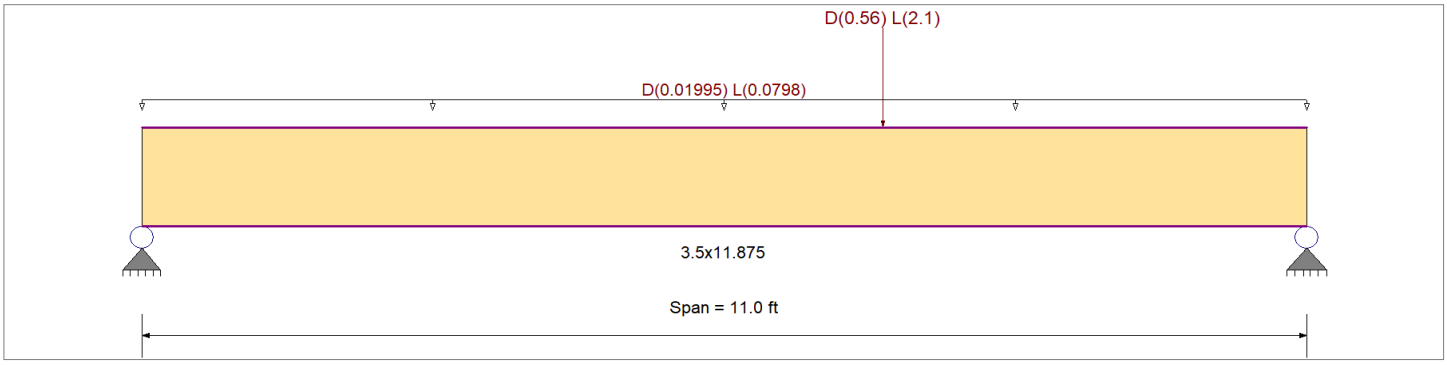

Applied Loads

Service loads entered. Load Factors will be applied for calculations.

Beam self weight calculated and added to loading
Uniform Load : D = 0.0150, L = 0.060 ksf, Tributary Width = 1.330 ft, (ROOF)
Point Load : D = 0.560, L = 2.10 k @ 7.0 ft, (BM#2)

DESIGN SUMMARY

Design OK

Maximum Bending Stress Ratio	=	0.419 : 1	Maximum Shear Stress Ratio	=	0.274 : 1
Section used for this span		3.5x11.875	Section used for this span		3.5x11.875
fb: Actual	=	1,216.33 psi	fv: Actual	=	79.55 psi
F'b	=	2,903.37 psi	F'v	=	290.00 psi
Load Combination		+D+L	Load Combination		+D+L
Location of maximum on span	=	6.985 ft	Location of maximum on span	=	10.036 ft
Span # where maximum occurs	=	Span # 1	Span # where maximum occurs	=	Span # 1

Maximum Deflection

Max Downward Transient Deflection	0.121 in	Ratio =	1094 >=360	Span: 1 : L Only
Max Upward Transient Deflection	0 in	Ratio =	0 <360	n/a
Max Downward Total Deflection	0.157 in	Ratio =	842 >=240	Span: 1 : +D+L
Max Upward Total Deflection	0 in	Ratio =	0 <240	n/a

Maximum Forces & Stresses for Load Combinations

Load Combination		Max Stress Ratios										Moment Values			Shear Values		
Segment Length	Span #	M	V	CD	CM	C_t	CLx	C_F	Cfu	C_i	C_r	M	fb	F'b	V	fv	F'v
D Only														0.0	0.00	0.0	0.0
Length = 11.0 ft	1	0.105	0.070	0.90	1.00	1.00	1.00	1.001	1.00	1.00	1.00	1.88	274.9	2,613.0	0.51	18.3	261.0
+D+L					1.00	1.00	1.00	1.001	1.00	1.00	1.00			0.0	0.00	0.0	0.0
Length = 11.0 ft	1	0.419	0.274	1.00	1.00	1.00	1.00	1.001	1.00	1.00	1.00	8.34	1,216.3	2,903.4	2.20	79.6	290.0
+D+0.750L					1.00	1.00	1.00	1.001	1.00	1.00	1.00			0.0	0.00	0.0	0.0
Length = 11.0 ft	1	0.270	0.177	1.25	1.00	1.00	1.00	1.001	1.00	1.00	1.00	6.72	981.0	3,629.2	1.78	64.2	362.5
+0.60D					1.00	1.00	1.00	1.001	1.00	1.00	1.00			0.0	0.00	0.0	0.0
Length = 11.0 ft	1	0.036	0.024	1.60	1.00	1.00	1.00	1.001	1.00	1.00	1.00	1.13	165.0	4,645.4	0.30	11.0	464.0

Project Title:
Engineer:
Project ID:
Project Descr:

Wood Beam

Project File: 23-043.ec6

LIC# : KW-06016495, Build:20.23.08.30 CK Engineering LLC (c) ENERCALC INC 1983-2023

DESCRIPTION: BM#3

Overall Maximum Deflections

Load Combination	Span	Max. "-" Defl	Location in Span	Load Combination	Max. "+" Defl	Location in Span
+D+L	1	0.1567	5.821		0.0000	0.000

Maximum Deflections for Load Combinations

Load Combination	Span	Max. Downward Defl		Location in Span	Max. Upward Defl		Location in Span	
D Only	1	0.0361	in	5.821 ft	0.0000	in	0.000	ft
+D+L	1	0.1567	in	5.821 ft	0.0000	in	0.000	ft
+D+0.750L	1	0.1266	in	5.821 ft	0.0000	in	0.000	ft
+0.60D	1	0.0217	in	5.821 ft	0.0000	in	0.000	ft
L Only	1	0.1206	in	5.861 ft	0.0000	in	0.000	ft

Vertical Reactions

Support notation : Far left is #1 Values in KIPS

Load Combination	Support 1	Support 2
Max Upward from all Load Conditions	1.587	2.313
Max Upward from Load Combinations	1.587	2.313
Max Upward from Load Cases	1.203	1.775
D Only	0.385	0.538
+D+L	1.587	2.313
+D+0.750L	1.287	1.869
+0.60D	0.231	0.323
L Only	1.203	1.775

Project Title:
Engineer:
Project ID:
Project Descr:

Wood Beam

Project File: 23-043.ec6

LIC# : KW-06016495, Build:20.23.08.30 CK Engineering LLC (c) ENERCALC INC 1983-2023

DESCRIPTION: BM#4

CODE REFERENCES

Calculations per NDS 2018, IBC 2021, ASCE 7-16
Load Combination Set : IBC 2018

Material Properties

Analysis Method : Allowable Stress Design
Load Combination IBC 2018

Wood Species : iLevel Truss Joist
Wood Grade : Parallam PSL 2.0E

Beam Bracing : Beam is Fully Braced against lateral-torsional buckling

Fb +	2,900.0 psi
Fb -	2,900.0 psi
Fc - Prll	2,900.0 psi
Fc - Perp	750.0 psi
Fv	290.0 psi
Ft	2,025.0 psi

E : Modulus of Elasticity

Ebend- xx	2,000.0 ksi
Eminbend - xx	1,016.54 ksi
Density	45.070 pcf

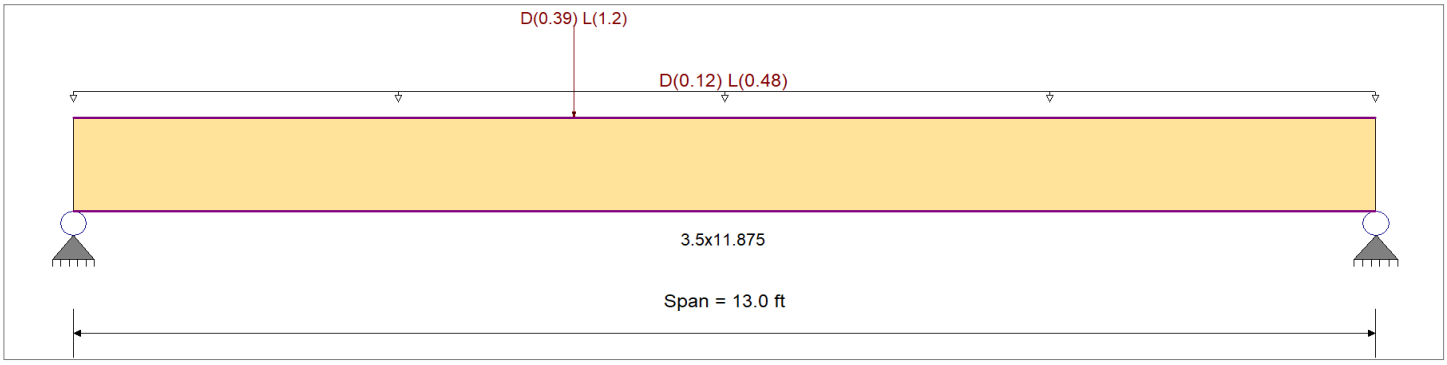

Applied Loads

Service loads entered. Load Factors will be applied for calculations.

Beam self weight calculated and added to loading
Uniform Load : D = 0.0150, L = 0.060 ksf, Tributary Width = 8.0 ft, (ROOF)
Point Load : D = 0.390, L = 1.20 k @ 5.0 ft, (BM#3)

DESIGN SUMMARY

Design OK

Maximum Bending Stress Ratio	=	0.866 : 1	Maximum Shear Stress Ratio	=	0.545 : 1
Section used for this span		3.5x11.875	Section used for this span		3.5x11.875
fb: Actual	=	2,513.50 psi	fv: Actual	=	158.12 psi
F'b	=	2,903.37 psi	F'v	=	290.00 psi
Load Combination		+D+L	Load Combination		+D+L
Location of maximum on span	=	5.504 ft	Location of maximum on span	=	0.000 ft
Span # where maximum occurs	=	Span # 1	Span # where maximum occurs	=	Span # 1

Maximum Deflection

Max Downward Transient Deflection	0.408 in	Ratio =	382	>=360	Span: 1 : L Only
Max Upward Transient Deflection	0 in	Ratio =	0	<360	n/a
Max Downward Total Deflection	0.526 in	Ratio =	296	>=240	Span: 1 : +D+L
Max Upward Total Deflection	0 in	Ratio =	0	<240	n/a

Maximum Forces & Stresses for Load Combinations

Load Combination / Segment Length	Span #	Max Stress Ratios M	V	CD	CM	C_t	CLx	C_F	Cfu	C_i	C_r	Moment Values M	fb	F'b	Shear Values V	fv	F'v
D Only														0.0	0.00	0.0	0.0
Length = 13.0 ft	1	0.216	0.135	0.90	1.00	1.00	1.00	1.001	1.00	1.00	1.00	3.87	564.5	2,613.0	0.98	35.3	261.0
+D+L					1.00	1.00	1.00	1.001	1.00	1.00	1.00			0.0	0.00	0.0	0.0
Length = 13.0 ft	1	0.866	0.545	1.00	1.00	1.00	1.00	1.001	1.00	1.00	1.00	17.23	2,513.5	2,903.4	4.38	158.1	290.0
+D+0.750L					1.00	1.00	1.00	1.001	1.00	1.00	1.00			0.0	0.00	0.0	0.0
Length = 13.0 ft	1	0.558	0.352	1.25	1.00	1.00	1.00	1.001	1.00	1.00	1.00	13.89	2,026.2	3,629.2	3.53	127.4	362.5
+0.60D					1.00	1.00	1.00	1.001	1.00	1.00	1.00			0.0	0.00	0.0	0.0
Length = 13.0 ft	1	0.073	0.046	1.60	1.00	1.00	1.00	1.001	1.00	1.00	1.00	2.32	338.7	4,645.4	0.59	21.2	464.0

Project Title:
Engineer:
Project ID:
Project Descr:

Wood Beam

Project File: 23-043.ec6

LIC# : KW-06016495, Build:20.23.08.30 CK Engineering LLC (c) ENERCALC INC 1983-2023

DESCRIPTION: BM#4

Overall Maximum Deflections

Load Combination	Span	Max. "-" Defl	Location in Span	Load Combination	Max. "+" Defl	Location in Span
+D+L	1	0.5258	6.405		0.0000	0.000

Maximum Deflections for Load Combinations

Load Combination	Span	Max. Downward Defl		Location in Span	Max. Upward Defl		Location in Span	
D Only	1	0.1175	in	6.405 ft	0.0000	in	0.000	ft
+D+L	1	0.5258	in	6.405 ft	0.0000	in	0.000	ft
+D+0.750L	1	0.4237	in	6.405 ft	0.0000	in	0.000	ft
+0.60D	1	0.0705	in	6.405 ft	0.0000	in	0.000	ft
L Only	1	0.4083	in	6.405 ft	0.0000	in	0.000	ft

Vertical Reactions

Support notation : Far left is #1 Values in KIPS

Load Combination	Support 1	Support 2
Max Upward from all Load Conditions	4.963	4.596
Max Upward from Load Combinations	4.963	4.596
Max Upward from Load Cases	3.858	3.582
D Only	1.105	1.015
+D+L	4.963	4.596
+D+0.750L	3.998	3.701
+0.60D	0.663	0.609
L Only	3.858	3.582

Project Title:
Engineer:
Project ID:
Project Descr:

Wood Beam

Project File: 23-043.ec6

LIC# : KW-06016495, Build:20.23.08.30 CK Engineering LLC (c) ENERCALC INC 1983-2023

DESCRIPTION: BM#5

CODE REFERENCES

Calculations per NDS 2018, IBC 2021, ASCE 7-16
Load Combination Set : IBC 2018

Material Properties

Analysis Method : Allowable Stress Design
Load Combination IBC 2018

Wood Species : iLevel Truss Joist
Wood Grade : Parallam PSL 2.0E

Beam Bracing : Beam is Fully Braced against lateral-torsional buckling

Fb +	2,900.0 psi
Fb -	2,900.0 psi
Fc - Prll	2,900.0 psi
Fc - Perp	750.0 psi
Fv	290.0 psi
Ft	2,025.0 psi

E : Modulus of Elasticity

Ebend- xx	2,000.0 ksi
Eminbend - xx	1,016.54 ksi
Density	45.070 pcf

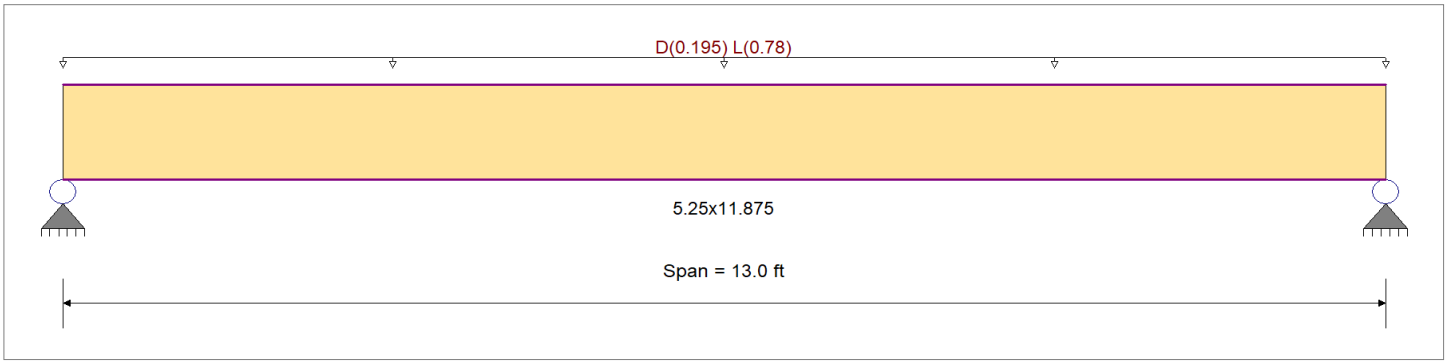

Applied Loads

Service loads entered. Load Factors will be applied for calculations.

Beam self weight calculated and added to loading
Uniform Load : D = 0.0150, L = 0.060 ksf, Tributary Width = 13.0 ft, (ROOF)

DESIGN SUMMARY

Design OK

Maximum Bending Stress Ratio	=	0.704 : 1	Maximum Shear Stress Ratio	=	0.458 : 1
Section used for this span		5.25x11.875	Section used for this span		5.25x11.875
fb: Actual	=	2,043.21 psi	fv: Actual	=	132.83 psi
F'b	=	2,903.37 psi	F'v	=	290.00 psi
Load Combination		+D+L	Load Combination		+D+L
Location of maximum on span	=	6.500 ft	Location of maximum on span	=	12.051 ft
Span # where maximum occurs	=	Span # 1	Span # where maximum occurs	=	Span # 1

Maximum Deflection

Max Downward Transient Deflection	0.344 in	Ratio =	453 >=360	Span: 1 : L Only
Max Upward Transient Deflection	0 in	Ratio =	0 <360	n/a
Max Downward Total Deflection	0.439 in	Ratio =	355 >=240	Span: 1 : +D+L
Max Upward Total Deflection	0 in	Ratio =	0 <240	n/a

Maximum Forces & Stresses for Load Combinations

Load Combination / Segment Length	Span #	Max Stress Ratios M	V	CD	CM	C_t	CLx	C_F	Cfu	C_i	C_r	Moment Values M	fb	F'b	Shear Values V	fv	F'v
D Only														0.0	0.00	0.0	0.0
Length = 13.0 ft	1	0.169	0.110	0.90	1.00	1.00	1.00	1.001	1.00	1.00	1.00	4.53	440.7	2,613.0	1.19	28.7	261.0
+D+L					1.00	1.00	1.00	1.001	1.00	1.00	1.00			0.0	0.00	0.0	0.0
Length = 13.0 ft	1	0.704	0.458	1.00	1.00	1.00	1.00	1.001	1.00	1.00	1.00	21.01	2,043.2	2,903.4	5.52	132.8	290.0
+D+0.750L					1.00	1.00	1.00	1.001	1.00	1.00	1.00			0.0	0.00	0.0	0.0
Length = 13.0 ft	1	0.453	0.295	1.25	1.00	1.00	1.00	1.001	1.00	1.00	1.00	16.89	1,642.6	3,629.2	4.44	106.8	362.5
+0.60D					1.00	1.00	1.00	1.001	1.00	1.00	1.00			0.0	0.00	0.0	0.0
Length = 13.0 ft	1	0.057	0.037	1.60	1.00	1.00	1.00	1.001	1.00	1.00	1.00	2.72	264.4	4,645.4	0.71	17.2	464.0

Project Title:
Engineer:
Project ID:
Project Descr:

Wood Beam

Project File: 23-043.ec6

LIC# : KW-06016495, Build:20.23.08.30 CK Engineering LLC (c) ENERCALC INC 1983-2023

DESCRIPTION: BM#5

Overall Maximum Deflections

Load Combination	Span	Max. "-" Defl	Location in Span	Load Combination	Max. "+" Defl	Location in Span
+D+L	1	0.4387	6.547		0.0000	0.000

Maximum Deflections for Load Combinations

Load Combination	Span	Max. Downward Defl		Location in Span	Max. Upward Defl		Location in Span	
D Only	1	0.0946	in	6.547 ft	0.0000	in	0.000	ft
+D+L	1	0.4387	in	6.547 ft	0.0000	in	0.000	ft
+D+0.750L	1	0.3527	in	6.547 ft	0.0000	in	0.000	ft
+0.60D	1	0.0568	in	6.547 ft	0.0000	in	0.000	ft
L Only	1	0.3441	in	6.547 ft	0.0000	in	0.000	ft

Vertical Reactions

Support notation : Far left is #1 Values in KIPS

Load Combination	Support 1	Support 2
Max Upward from all Load Conditions	6.464	6.464
Max Upward from Load Combinations	6.464	6.464
Max Upward from Load Cases	5.070	5.070
D Only	1.394	1.394
+D+L	6.464	6.464
+D+0.750L	5.197	5.197
+0.60D	0.837	0.837
L Only	5.070	5.070

Project Title:
Engineer:
Project ID:
Project Descr:

Wood Beam

Project File: 23-043.ec6

DESCRIPTION: BM#6

CODE REFERENCES

Calculations per NDS 2018, IBC 2021, ASCE 7-16
Load Combination Set : IBC 2018

Material Properties

Analysis Method : Allowable Stress Design
Load Combination IBC 2018

Wood Species : DF/DF
Wood Grade : 24F-V4

Beam Bracing : Beam is Fully Braced against lateral-torsional buckling

Fb +	2,400.0 psi
Fb -	1,850.0 psi
Fc - Prll	1,650.0 psi
Fc - Perp	650.0 psi
Fv	265.0 psi
Ft	1,100.0 psi

E : Modulus of Elasticity

Ebend- xx	1,800.0 ksi
Eminbend - xx	950.0 ksi
Ebend- yy	1,600.0 ksi
Eminbend - yy	850.0 ksi
Density	31.210 pcf

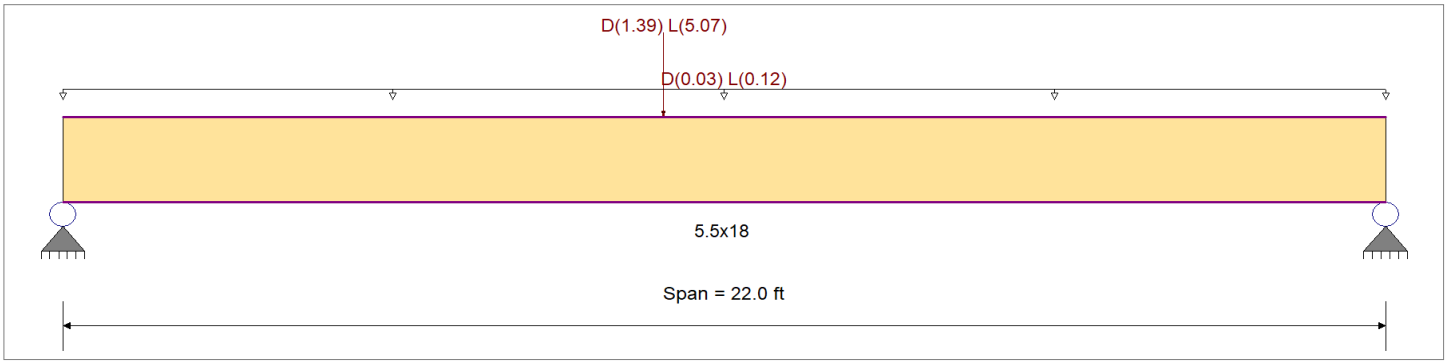

Applied Loads

Service loads entered. Load Factors will be applied for calculations.

Beam self weight calculated and added to loading
Uniform Load : D = 0.0150, L = 0.060 ksf, Tributary Width = 2.0 ft, (ROOF)
Point Load : D = 1.390, L = 5.070 k @ 10.0 ft, (BM#5)

DESIGN SUMMARY

Design OK

Maximum Bending Stress Ratio	=	0.806 : 1	Maximum Shear Stress Ratio	=	0.295 : 1
Section used for this span		5.5x18	Section used for this span		5.5x18
fb: Actual	=	1,835.26 psi	fv: Actual	=	78.21 psi
F'b	=	2,277.80 psi	F'v	=	265.00 psi
Load Combination		+D+L	Load Combination		+D+L
Location of maximum on span	=	10.036 ft	Location of maximum on span	=	0.000 ft
Span # where maximum occurs	=	Span # 1	Span # where maximum occurs	=	Span # 1

Maximum Deflection

Max Downward Transient Deflection	0.534 in	Ratio =	494	>=360	Span: 1 : L Only
Max Upward Transient Deflection	0 in	Ratio =	0	<360	n/a
Max Downward Total Deflection	0.701 in	Ratio =	376	>=240	Span: 1 : +D+L
Max Upward Total Deflection	0 in	Ratio =	0	<240	n/a

Maximum Forces & Stresses for Load Combinations

Load Combination		Max Stress Ratios										Moment Values			Shear Values		
Segment Length	Span #	M	V	CD	CM	C_t	CLx	C_V	Cfu	C_i	C_r	M	fb	F'b	V	fv	F'v
D Only														0.0	0.00	0.0	0.0
Length = 22.0 ft	1	0.210	0.079	0.90	1.00	1.00	1.00	0.949	1.00	1.00	1.00	10.65	430.2	2,050.0	1.25	18.9	238.5
+D+L					1.00	1.00	1.00	0.949	1.00	1.00	1.00			0.0	0.00	0.0	0.0
Length = 22.0 ft	1	0.806	0.295	1.00	1.00	1.00	1.00	0.949	1.00	1.00	1.00	45.42	1,835.3	2,277.8	5.16	78.2	265.0
+D+0.750L					1.00	1.00	1.00	0.949	1.00	1.00	1.00			0.0	0.00	0.0	0.0
Length = 22.0 ft	1	0.521	0.191	1.25	1.00	1.00	1.00	0.949	1.00	1.00	1.00	36.73	1,484.0	2,847.2	4.18	63.4	331.3
+0.60D					1.00	1.00	1.00	0.949	1.00	1.00	1.00			0.0	0.00	0.0	0.0
Length = 22.0 ft	1	0.071	0.027	1.60	1.00	1.00	1.00	0.949	1.00	1.00	1.00	6.39	258.1	3,644.5	0.75	11.4	424.0

Wood Beam

LIC# : KW-06016495, Build:20.23.08.30 CK Engineering LLC (c) ENERCALC INC 1983-2023

DESCRIPTION: BM#6

Overall Maximum Deflections

Load Combination	Span	Max. "-" Defl	Location in Span	Load Combination	Max. "+" Defl	Location in Span
+D+L	1	0.7007	10.839		0.0000	0.000

Maximum Deflections for Load Combinations

Load Combination	Span	Max. Downward Defl		Location in Span	Max. Upward Defl		Location in Span	
D Only	1	0.1668	in	10.839 ft	0.0000	in	0.000	ft
+D+L	1	0.7007	in	10.839 ft	0.0000	in	0.000	ft
+D+0.750L	1	0.5672	in	10.839 ft	0.0000	in	0.000	ft
+0.60D	1	0.1001	in	10.839 ft	0.0000	in	0.000	ft
L Only	1	0.5339	in	10.759 ft	0.0000	in	0.000	ft

Vertical Reactions

Support notation : Far left is #1 Values in KIPS

Load Combination	Support 1	Support 2
Max Upward from all Load Conditions	5.410	4.822
Max Upward from Load Combinations	5.410	4.822
Max Upward from Load Cases	4.085	3.625
D Only	1.324	1.198
+D+L	5.410	4.822
+D+0.750L	4.388	3.916
+0.60D	0.795	0.719
L Only	4.085	3.625

Project Title:
Engineer:
Project ID:
Project Descr:

Wood Beam

Project File: 23-043.ec6

LIC# : KW-06016495, Build:20.23.08.30 CK Engineering LLC (c) ENERCALC INC 1983-2023

DESCRIPTION: BM#7

CODE REFERENCES

Calculations per NDS 2018, IBC 2021, ASCE 7-16
Load Combination Set : IBC 2018

Material Properties

Analysis Method :	Allowable Stress Design	Fb +	875.0 psi	*E : Modulus of Elasticity*	
Load Combination	IBC 2018	Fb -	875.0 psi	Ebend- xx	1,300.0 ksi
		Fc - Prll	600.0 psi	Eminbend - xx	470.0 ksi
Wood Species :	Douglas Fir-Larch (North)	Fc - Perp	625.0 psi		
Wood Grade :	No.2	Fv	170.0 psi		
		Ft	425.0 psi	Density	30.590 pcf
Beam Bracing :	Beam is Fully Braced against lateral-torsional buckling				

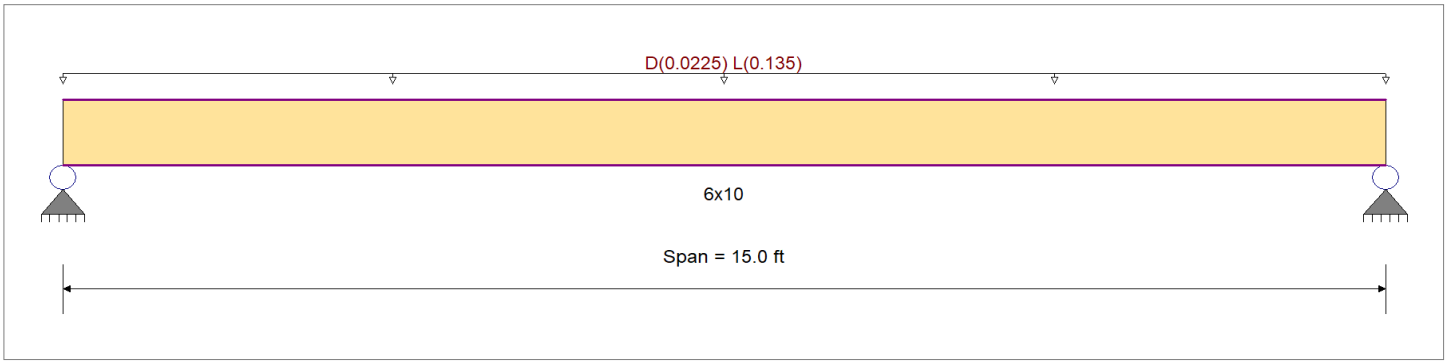

Applied Loads

Service loads entered. Load Factors will be applied for calculations.

Beam self weight calculated and added to loading
Uniform Load : D = 0.010, L = 0.060 ksf, Tributary Width = 2.250 ft, (DECK)

DESIGN SUMMARY

Design OK

Maximum Bending Stress Ratio	=	0.983 : 1	Maximum Shear Stress Ratio	=	0.240 : 1
Section used for this span		6x10	Section used for this span		6x10
fb: Actual	=	687.81 psi	fv: Actual	=	32.59 psi
F'b	=	700.00 psi	F'v	=	136.00 psi
Load Combination		+D+L	Load Combination		+D+L
Location of maximum on span	=	7.500 ft	Location of maximum on span	=	14.234 ft
Span # where maximum occurs	=	Span # 1	Span # where maximum occurs	=	Span # 1

Maximum Deflection

Max Downward Transient Deflection	0.319 in	Ratio =	564 >=360	Span: 1 : L Only
Max Upward Transient Deflection	0 in	Ratio =	0 <360	n/a
Max Downward Total Deflection	0.398 in	Ratio =	452 >=240	Span: 1 : +D+L
Max Upward Total Deflection	0 in	Ratio =	0 <240	n/a

Maximum Forces & Stresses for Load Combinations

Load Combination		Max Stress Ratios										Moment Values			Shear Values		
Segment Length	Span #	M	V	CD	CM	C_t	CLx	C_F	Cfu	C_i	C_r	M	fb	F'b	V	fv	F'v
D Only														0.0	0.00	0.0	0.0
Length = 15.0 ft	1	0.218	0.053	0.90	1.00	1.00	1.00	1.000	1.00	0.80	1.00	0.94	137.1	630.0	0.23	6.5	122.4
+D+L					1.00	1.00	1.00	1.000	1.00	0.80	1.00			0.0	0.00	0.0	0.0
Length = 15.0 ft	1	0.983	0.240	1.00	1.00	1.00	1.00	1.000	1.00	0.80	1.00	4.74	687.8	700.0	1.14	32.6	136.0
+D+0.750L					1.00	1.00	1.00	1.000	1.00	0.80	1.00			0.0	0.00	0.0	0.0
Length = 15.0 ft	1	0.629	0.153	1.25	1.00	1.00	1.00	1.000	1.00	0.80	1.00	3.79	550.1	875.0	0.91	26.1	170.0
+0.60D					1.00	1.00	1.00	1.000	1.00	0.80	1.00			0.0	0.00	0.0	0.0
Length = 15.0 ft	1	0.073	0.018	1.60	1.00	1.00	1.00	1.000	1.00	0.80	1.00	0.57	82.2	1,120.0	0.14	3.9	217.6

Wood Beam

LIC# : KW-06016495, Build:20.23.08.30 CK Engineering LLC (c) ENERCALC INC 1983-2023

DESCRIPTION: BM#7

Overall Maximum Deflections

Load Combination	Span	Max. "-" Defl	Location in Span	Load Combination	Max. "+" Defl	Location in Span
+D+L	1	0.3980	7.555		0.0000	0.000

Maximum Deflections for Load Combinations

Load Combination	Span	Max. Downward Defl		Location in Span	Max. Upward Defl		Location in Span	
D Only	1	0.0793	in	7.555 ft	0.0000	in	0.000	ft
+D+L	1	0.3980	in	7.555 ft	0.0000	in	0.000	ft
+D+0.750L	1	0.3184	in	7.555 ft	0.0000	in	0.000	ft
+0.60D	1	0.0476	in	7.555 ft	0.0000	in	0.000	ft
L Only	1	0.3187	in	7.555 ft	0.0000	in	0.000	ft

Vertical Reactions

Support notation : Far left is #1 Values in KIPS

Load Combination	Support 1	Support 2
Max Upward from all Load Conditions	1.264	1.264
Max Upward from Load Combinations	1.264	1.264
Max Upward from Load Cases	1.013	1.013
D Only	0.252	0.252
+D+L	1.264	1.264
+D+0.750L	1.011	1.011
+0.60D	0.151	0.151
L Only	1.013	1.013

Project Title:
Engineer:
Project ID:
Project Descr:

Wood Beam

Project File: 23-043.ec6

LIC# : KW-06016495, Build:20.23.08.30 CK Engineering LLC (c) ENERCALC INC 1983-2023

DESCRIPTION: BM#7.1

CODE REFERENCES

Calculations per NDS 2018, IBC 2021, ASCE 7-16
Load Combination Set : IBC 2018

Material Properties

Analysis Method : Allowable Stress Design
Load Combination IBC 2018

Wood Species : Douglas Fir-Larch (North)
Wood Grade : No.2

Beam Bracing : Beam is Fully Braced against lateral-torsional buckling

Fb +	875.0 psi
Fb -	875.0 psi
Fc - Prll	600.0 psi
Fc - Perp	625.0 psi
Fv	170.0 psi
Ft	425.0 psi

E : Modulus of Elasticity

Ebend- xx	1,300.0 ksi
Eminbend - xx	470.0 ksi
Density	30.590 pcf

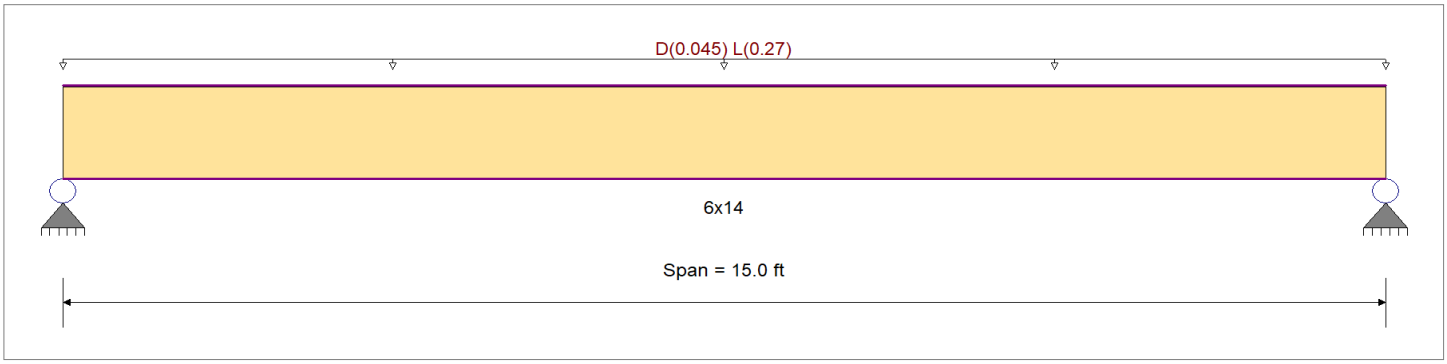

Applied Loads

Service loads entered. Load Factors will be applied for calculations.

Beam self weight calculated and added to loading
Uniform Load : D = 0.010, L = 0.060 ksf, Tributary Width = 4.50 ft, (DECK)

DESIGN SUMMARY

Design OK

Maximum Bending Stress Ratio	=	0.967 : 1	Maximum Shear Stress Ratio	=	0.315 : 1
Section used for this span		6x14	Section used for this span		6x14
fb: Actual	=	668.23 psi	fv: Actual	=	42.80 psi
F'b	=	690.90 psi	F'v	=	136.00 psi
Load Combination		+D+L	Load Combination		+D+L
Location of maximum on span	=	7.500 ft	Location of maximum on span	=	13.905 ft
Span # where maximum occurs	=	Span # 1	Span # where maximum occurs	=	Span # 1

Maximum Deflection

Max Downward Transient Deflection	0.222 in	Ratio =	810 >=360	Span: 1 : L Only
Max Upward Transient Deflection	0 in	Ratio =	0 <360	n/a
Max Downward Total Deflection	0.272 in	Ratio =	661 >=240	Span: 1 : +D+L
Max Upward Total Deflection	0 in	Ratio =	0 <240	n/a

Maximum Forces & Stresses for Load Combinations

Load Combination / Segment Length	Span #	Max Stress Ratios M	V	CD	CM	C_t	CLx	C_F	Cfu	C_i	C_r	Moment Values M	fb	F'b	Shear Values V	fv	F'v
D Only														0.0	0.00	0.0	0.0
Length = 15.0 ft	1	0.197	0.064	0.90	1.00	1.00	1.00	0.987	1.00	0.80	1.00	1.71	122.8	621.8	0.39	7.9	122.4
+D+L					1.00	1.00	1.00	0.987	1.00	0.80	1.00			0.0	0.00	0.0	0.0
Length = 15.0 ft	1	0.967	0.315	1.00	1.00	1.00	1.00	0.987	1.00	0.80	1.00	9.30	668.2	690.9	2.12	42.8	136.0
+D+0.750L					1.00	1.00	1.00	0.987	1.00	0.80	1.00			0.0	0.00	0.0	0.0
Length = 15.0 ft	1	0.616	0.200	1.25	1.00	1.00	1.00	0.987	1.00	0.80	1.00	7.40	531.9	863.6	1.69	34.1	170.0
+0.60D					1.00	1.00	1.00	0.987	1.00	0.80	1.00			0.0	0.00	0.0	0.0
Length = 15.0 ft	1	0.067	0.022	1.60	1.00	1.00	1.00	0.987	1.00	0.80	1.00	1.03	73.7	1,105.4	0.23	4.7	217.6

Wood Beam

LIC# : KW-06016495, Build:20.23.08.30 CK Engineering LLC (c) ENERCALC INC 1983-2023

DESCRIPTION: BM#7.1

Overall Maximum Deflections

Load Combination	Span	Max. "-" Defl	Location in Span	Load Combination	Max. "+" Defl	Location in Span
+D+L	1	0.2721	7.555		0.0000	0.000

Maximum Deflections for Load Combinations

Load Combination	Span	Max. Downward Defl		Location in Span	Max. Upward Defl		Location in Span	
D Only	1	0.0500	in	7.555 ft	0.0000	in	0.000	ft
+D+L	1	0.2721	in	7.555 ft	0.0000	in	0.000	ft
+D+0.750L	1	0.2166	in	7.555 ft	0.0000	in	0.000	ft
+0.60D	1	0.0300	in	7.555 ft	0.0000	in	0.000	ft
L Only	1	0.2221	in	7.555 ft	0.0000	in	0.000	ft

Vertical Reactions

Support notation : Far left is #1 Values in KIPS

Load Combination	Support 1	Support 2
Max Upward from all Load Conditions	2.481	2.481
Max Upward from Load Combinations	2.481	2.481
Max Upward from Load Cases	2.025	2.025
D Only	0.456	0.456
+D+L	2.481	2.481
+D+0.750L	1.975	1.975
+0.60D	0.273	0.273
L Only	2.025	2.025

Project Title:
Engineer:
Project ID:
Project Descr:

Wood Beam

Project File: 23-043.ec6

LIC# : KW-06016495, Build:20.23.08.30 CK Engineering LLC (c) ENERCALC INC 1983-2023

DESCRIPTION: BM#8

CODE REFERENCES

Calculations per NDS 2018, IBC 2021, ASCE 7-16
Load Combination Set : IBC 2018

Material Properties

Analysis Method : Allowable Stress Design
Load Combination IBC 2018

Wood Species : DF/DF
Wood Grade : 24F-V4

Beam Bracing : Beam is Fully Braced against lateral-torsional buckling

Fb +	2,400.0 psi
Fb -	1,850.0 psi
Fc - Prll	1,650.0 psi
Fc - Perp	650.0 psi
Fv	265.0 psi
Ft	1,100.0 psi

E : Modulus of Elasticity

Ebend- xx	1,800.0 ksi
Eminbend - xx	950.0 ksi
Ebend- yy	1,600.0 ksi
Eminbend - yy	850.0 ksi
Density	31.210 pcf

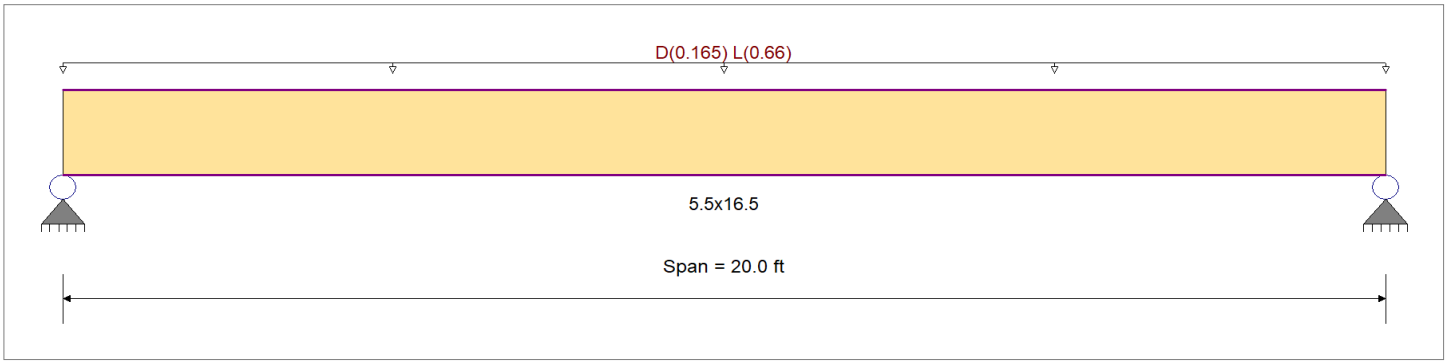

Applied Loads

Service loads entered. Load Factors will be applied for calculations.

Beam self weight calculated and added to loading
Uniform Load : D = 0.0150, L = 0.060 ksf, Tributary Width = 11.0 ft, (DECK)

DESIGN SUMMARY

Design OK

Maximum Bending Stress Ratio	=	0.875 : 1	Maximum Shear Stress Ratio	=	0.458 : 1
Section used for this span		5.5x16.5	Section used for this span		5.5x16.5
fb: Actual	=	2,030.76 psi	fv: Actual	=	121.27 psi
F'b	=	2,319.71 psi	F'v	=	265.00 psi
Load Combination		+D+L	Load Combination		+D+L
Location of maximum on span	=	10.000 ft	Location of maximum on span	=	0.000 ft
Span # where maximum occurs	=	Span # 1	Span # where maximum occurs	=	Span # 1

Maximum Deflection

Max Downward Transient Deflection	0.645 in	Ratio =	372 >=360	Span: 1 : L Only
Max Upward Transient Deflection	0 in	Ratio =	0 <360	n/a
Max Downward Total Deflection	0.825 in	Ratio =	290 >=240	Span: 1 : +D+L
Max Upward Total Deflection	0 in	Ratio =	0 <240	n/a

Maximum Forces & Stresses for Load Combinations

Load Combination / Segment Length	Span #	Max Stress Ratios M	V	CD	CM	C_t	CLx	C_V	Cfu	C_i	C_r	Moment Values M	fb	F'b	Shear Values V	fv	F'v
D Only														0.0	0.00	0.0	0.0
Length = 20.0 ft	1	0.213	0.111	0.90	1.00	1.00	1.00	0.967	1.00	1.00	1.00	9.23	444.0	2,087.7	1.60	26.5	238.5
+D+L					1.00	1.00	1.00	0.967	1.00	1.00	1.00			0.0	0.00	0.0	0.0
Length = 20.0 ft	1	0.875	0.458	1.00	1.00	1.00	1.00	0.967	1.00	1.00	1.00	42.23	2,030.8	2,319.7	7.34	121.3	265.0
+D+0.750L					1.00	1.00	1.00	0.967	1.00	1.00	1.00			0.0	0.00	0.0	0.0
Length = 20.0 ft	1	0.564	0.295	1.25	1.00	1.00	1.00	0.967	1.00	1.00	1.00	33.98	1,634.1	2,899.6	5.90	97.6	331.3
+0.60D					1.00	1.00	1.00	0.967	1.00	1.00	1.00			0.0	0.00	0.0	0.0
Length = 20.0 ft	1	0.072	0.038	1.60	1.00	1.00	1.00	0.967	1.00	1.00	1.00	5.54	266.4	3,711.5	0.96	15.9	424.0

Project Title:
Engineer:
Project ID:
Project Descr:

Wood Beam

Project File: 23-043.ec6

DESCRIPTION: BM#8

Overall Maximum Deflections

Load Combination	Span	Max. "-" Defl	Location in Span	Load Combination	Max. "+" Defl	Location in Span
+D+L	1	0.8253	10.073		0.0000	0.000

Maximum Deflections for Load Combinations

Load Combination	Span	Max. Downward Defl		Location in Span	Max. Upward Defl		Location in Span	
D Only	1	0.1804	in	10.073 ft	0.0000	in	0.000	ft
+D+L	1	0.8253	in	10.073 ft	0.0000	in	0.000	ft
+D+0.750L	1	0.6641	in	10.073 ft	0.0000	in	0.000	ft
+0.60D	1	0.1083	in	10.073 ft	0.0000	in	0.000	ft
L Only	1	0.6449	in	10.073 ft	0.0000	in	0.000	ft

Vertical Reactions

Support notation : Far left is #1 Values in KIPS

Load Combination	Support 1	Support 2
Max Upward from all Load Conditions	8.447	8.447
Max Upward from Load Combinations	8.447	8.447
Max Upward from Load Cases	6.600	6.600
D Only	1.847	1.847
+D+L	8.447	8.447
+D+0.750L	6.797	6.797
+0.60D	1.108	1.108
L Only	6.600	6.600

Project Title:
Engineer:
Project ID:
Project Descr:

Wood Beam

Project File: 23-043.ec6

LIC# : KW-06016495, Build:20.23.08.30 CK Engineering LLC (c) ENERCALC INC 1983-2023

DESCRIPTION: BM#9

CODE REFERENCES

Calculations per NDS 2018, IBC 2021, ASCE 7-16
Load Combination Set : IBC 2018

Material Properties

Analysis Method : Allowable Stress Design
Load Combination IBC 2018

Wood Species : iLevel Truss Joist
Wood Grade : Parallam PSL 2.0E

Beam Bracing : Beam is Fully Braced against lateral-torsional buckling

Fb +	2,900.0 psi
Fb -	2,900.0 psi
Fc - Prll	2,900.0 psi
Fc - Perp	750.0 psi
Fv	290.0 psi
Ft	2,025.0 psi

E : Modulus of Elasticity

Ebend- xx	2,000.0 ksi
Eminbend - xx	1,016.54 ksi
Density	45.070 pcf

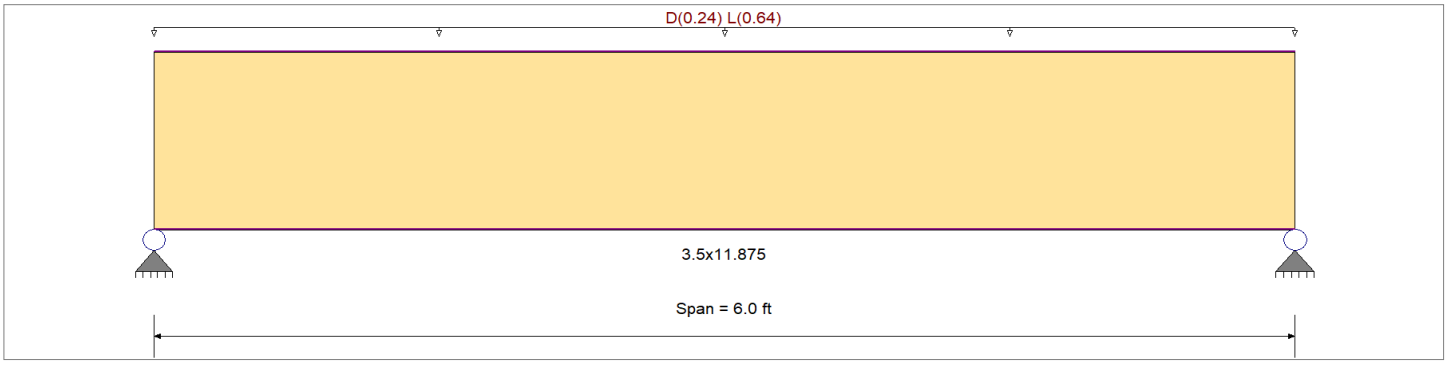

Applied Loads

Service loads entered. Load Factors will be applied for calculations.

Beam self weight calculated and added to loading
Uniform Load : D = 0.0150, L = 0.040 ksf, Tributary Width = 16.0 ft, (FLOOR)

DESIGN SUMMARY

Design OK

Maximum Bending Stress Ratio	=	0.202 : 1	Maximum Shear Stress Ratio	=	0.224 : 1
Section used for this span		3.5x11.875	Section used for this span		3.5x11.875
fb: Actual	=	586.23 psi	fv: Actual	=	64.93 psi
F'b	=	2,903.37 psi	F'v	=	290.00 psi
Load Combination		+D+L	Load Combination		+D+L
Location of maximum on span	=	3.000 ft	Location of maximum on span	=	0.000 ft
Span # where maximum occurs	=	Span # 1	Span # where maximum occurs	=	Span # 1

Maximum Deflection

Max Downward Transient Deflection	0.019 in	Ratio =	3746 >=360	Span: 1 : L Only
Max Upward Transient Deflection	0 in	Ratio =	0 <360	n/a
Max Downward Total Deflection	0.027 in	Ratio =	2685 >=240	Span: 1 : +D+L
Max Upward Total Deflection	0 in	Ratio =	0 <240	n/a

Maximum Forces & Stresses for Load Combinations

Load Combination / Segment Length	Span #	Max Stress Ratios M	V	CD	CM	C_t	CLx	C_F	Cfu	C_i	C_r	Moment Values M	fb	F'b	Shear Values V	fv	F'v
D Only														0.0	0.00	0.0	0.0
Length = 6.0 ft	1	0.064	0.070	0.90	1.00	1.00	1.00	1.001	1.00	1.00	1.00	1.14	166.1	2,613.0	0.51	18.4	261.0
+D+L					1.00	1.00	1.00	1.001	1.00	1.00	1.00			0.0	0.00	0.0	0.0
Length = 6.0 ft	1	0.202	0.224	1.00	1.00	1.00	1.00	1.001	1.00	1.00	1.00	4.02	586.2	2,903.4	1.80	64.9	290.0
+D+0.750L					1.00	1.00	1.00	1.001	1.00	1.00	1.00			0.0	0.00	0.0	0.0
Length = 6.0 ft	1	0.133	0.147	1.25	1.00	1.00	1.00	1.001	1.00	1.00	1.00	3.30	481.2	3,629.2	1.48	53.3	362.5
+0.60D					1.00	1.00	1.00	1.001	1.00	1.00	1.00			0.0	0.00	0.0	0.0
Length = 6.0 ft	1	0.021	0.024	1.60	1.00	1.00	1.00	1.001	1.00	1.00	1.00	0.68	99.7	4,645.4	0.31	11.0	464.0

Project Title:
Engineer:
Project ID:
Project Descr:

Wood Beam

Project File: 23-043.ec6

LIC# : KW-06016495, Build:20.23.08.30 CK Engineering LLC (c) ENERCALC INC 1983-2023

DESCRIPTION: BM#9

Overall Maximum Deflections

Load Combination	Span	Max. "-" Defl	Location in Span	Load Combination	Max. "+" Defl	Location in Span
+D+L	1	0.0268	3.022		0.0000	0.000

Maximum Deflections for Load Combinations

Load Combination	Span	Max. Downward Defl		Location in Span	Max. Upward Defl		Location in Span	
D Only	1	0.0076	in	3.022 ft	0.0000	in	0.000	ft
+D+L	1	0.0268	in	3.022 ft	0.0000	in	0.000	ft
+D+0.750L	1	0.0220	in	3.022 ft	0.0000	in	0.000	ft
+0.60D	1	0.0046	in	3.022 ft	0.0000	in	0.000	ft
L Only	1	0.0192	in	3.022 ft	0.0000	in	0.000	ft

Vertical Reactions

Support notation : Far left is #1 Values in KIPS

Load Combination	Support 1	Support 2
Max Upward from all Load Conditions	2.679	2.679
Max Upward from Load Combinations	2.679	2.679
Max Upward from Load Cases	1.920	1.920
D Only	0.759	0.759
+D+L	2.679	2.679
+D+0.750L	2.199	2.199
+0.60D	0.455	0.455
L Only	1.920	1.920

Project Title:
Engineer:
Project ID:
Project Descr:

Wood Beam

Project File: 23-043.ec6

DESCRIPTION: BM#10

CODE REFERENCES

Calculations per NDS 2018, IBC 2021, ASCE 7-16
Load Combination Set : IBC 2018

Material Properties

Analysis Method : Allowable Stress Design
Load Combination IBC 2018

Wood Species : iLevel Truss Joist
Wood Grade : Parallam PSL 2.0E

Beam Bracing : Beam is Fully Braced against lateral-torsional buckling

Fb +	2,900.0 psi
Fb -	2,900.0 psi
Fc - Prll	2,900.0 psi
Fc - Perp	750.0 psi
Fv	290.0 psi
Ft	2,025.0 psi

E : Modulus of Elasticity

Ebend- xx	2,000.0 ksi
Eminbend - xx	1,016.54 ksi
Density	45.070 pcf

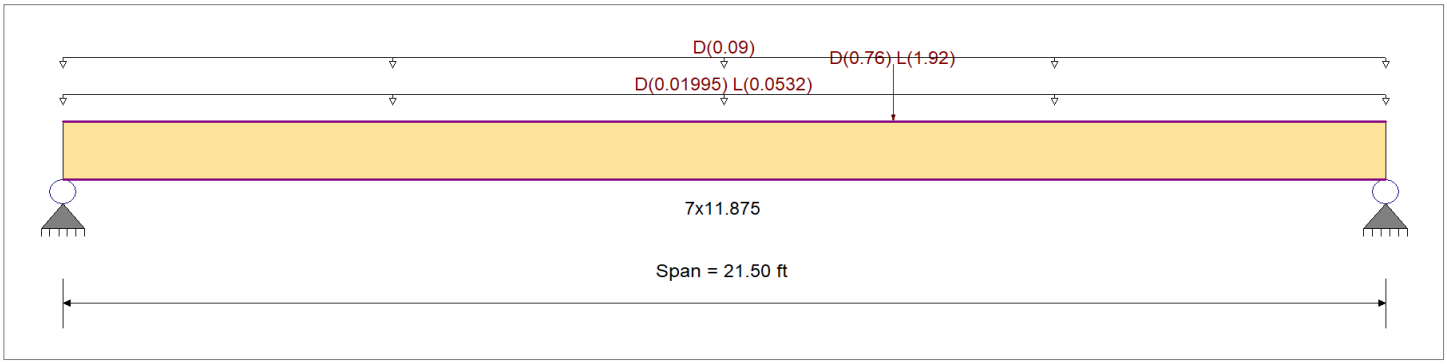

Applied Loads

Service loads entered. Load Factors will be applied for calculations.

Beam self weight calculated and added to loading
Uniform Load : D = 0.0150, L = 0.040 ksf, Tributary Width = 1.330 ft, (FLOOR)
Uniform Load : D = 0.010 ksf, Tributary Width = 9.0 ft, (WALL)
Point Load : D = 0.760, L = 1.920 k @ 13.50 ft, (BM#9)

DESIGN SUMMARY

Design OK

Maximum Bending Stress Ratio	=	0.595 : 1	Maximum Shear Stress Ratio	=	0.220 : 1
Section used for this span		7x11.875	Section used for this span		7x11.875
fb: Actual	=	1,726.90 psi	fv: Actual	=	63.85 psi
F'b	=	2,903.37 psi	F'v	=	290.00 psi
Load Combination		+D+L	Load Combination		+D+L
Location of maximum on span	=	13.496 ft	Location of maximum on span	=	20.558 ft
Span # where maximum occurs	=	Span # 1	Span # where maximum occurs	=	Span # 1

Maximum Deflection

Max Downward Transient Deflection	0.455 in	Ratio =	567 >=360	Span: 1 : L Only
Max Upward Transient Deflection	0 in	Ratio =	0 <360	n/a
Max Downward Total Deflection	0.919 in	Ratio =	280 >=240	Span: 1 : +D+L
Max Upward Total Deflection	0 in	Ratio =	0 <240	n/a

Maximum Forces & Stresses for Load Combinations

Load Combination / Segment Length	Span #	Max Stress Ratios M	V	CD	CM	C_t	CLx	C_F	Cfu	C_i	C_r	Moment Values M	fb	F'b	Shear Values V	fv	F'v
D Only														0.0	0.00	0.0	0.0
Length = 21.50 ft	1	0.312	0.125	0.90	1.00	1.00	1.00	1.001	1.00	1.00	1.00	11.19	816.2	2,613.0	1.81	32.7	261.0
+D+L					1.00	1.00	1.00	1.001	1.00	1.00	1.00			0.0	0.00	0.0	0.0
Length = 21.50 ft	1	0.595	0.220	1.00	1.00	1.00	1.00	1.001	1.00	1.00	1.00	23.68	1,726.9	2,903.4	3.54	63.8	290.0
+D+0.750L					1.00	1.00	1.00	1.001	1.00	1.00	1.00			0.0	0.00	0.0	0.0
Length = 21.50 ft	1	0.413	0.155	1.25	1.00	1.00	1.00	1.001	1.00	1.00	1.00	20.55	1,498.7	3,629.2	3.11	56.1	362.5
+0.60D					1.00	1.00	1.00	1.001	1.00	1.00	1.00			0.0	0.00	0.0	0.0
Length = 21.50 ft	1	0.105	0.042	1.60	1.00	1.00	1.00	1.001	1.00	1.00	1.00	6.71	489.7	4,645.4	1.09	19.6	464.0

Project Title:
Engineer:
Project ID:
Project Descr:

Wood Beam

Project File: 23-043.ec6

LIC# : KW-06016495, Build:20.23.08.30 CK Engineering LLC (c) ENERCALC INC 1983-2023

DESCRIPTION: BM#10

Overall Maximum Deflections

Load Combination	Span	Max. "-" Defl	Location in Span	Load Combination	Max. "+" Defl	Location in Span
+D+L	1	0.9187	11.221		0.0000	0.000

Maximum Deflections for Load Combinations

Load Combination	Span	Max. Downward Defl		Location in Span		Max. Upward Defl		Location in Span	
D Only	1	0.4641	in	10.985	ft	0.0000	in	0.000	ft
+D+L	1	0.9187	in	11.221	ft	0.0000	in	0.000	ft
+D+0.750L	1	0.8051	in	11.142	ft	0.0000	in	0.000	ft
+0.60D	1	0.2785	in	10.985	ft	0.0000	in	0.000	ft
L Only	1	0.4549	in	11.378	ft	0.0000	in	0.000	ft

Vertical Reactions

Support notation : Far left is #1 Values in KIPS

Load Combination	Support 1	Support 2
Max Upward from all Load Conditions	3.031	3.716
Max Upward from Load Combinations	3.031	3.716
Max Upward from Load Cases	1.744	1.939
D Only	1.744	1.939
+D+L	3.031	3.716
+D+0.750L	2.709	3.272
+0.60D	1.047	1.163
L Only	1.286	1.777

Project Title:
Engineer:
Project ID:
Project Descr:

Wood Beam

Project File: 23-043.ec6

LIC# : KW-06016495, Build:20.23.08.30 CK Engineering LLC (c) ENERCALC INC 1983-2023

DESCRIPTION: BM#11

CODE REFERENCES

Calculations per NDS 2018, IBC 2021, ASCE 7-16
Load Combination Set : IBC 2018

Material Properties

Analysis Method :	Allowable Stress Design	Fb +	875 psi	*E : Modulus of Elasticity*	
Load Combination	IBC 2018	Fb -	875 psi	Ebend- xx	1300 ksi
		Fc - Prll	600 psi	Eminbend - xx	470 ksi
Wood Species	: Douglas Fir-Larch (North)	Fc - Perp	625 psi		
Wood Grade	: No.2	Fv	170 psi		
		Ft	425 psi	Density	30.59 pcf
Beam Bracing	: Beam is Fully Braced against lateral-torsional buckling				

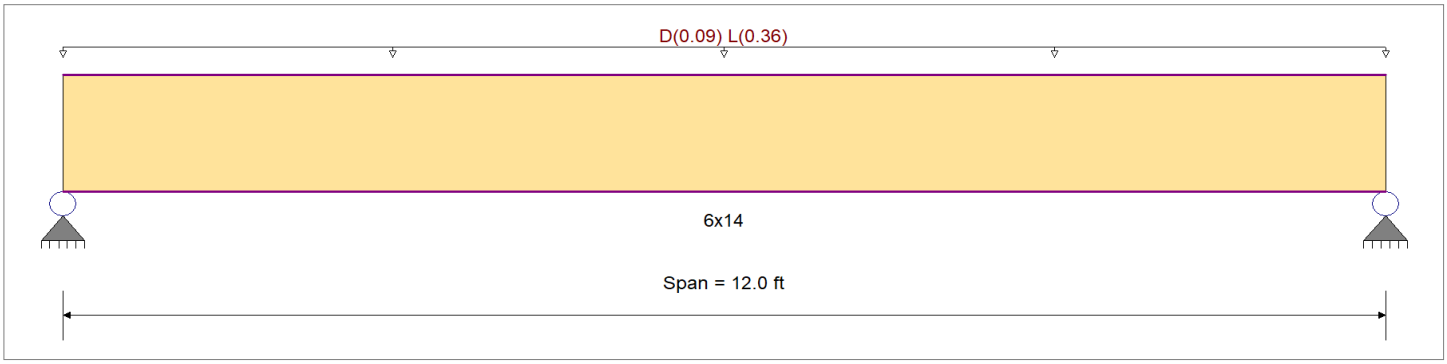

Applied Loads

Service loads entered. Load Factors will be applied for calculations.

Beam self weight calculated and added to loading
Uniform Load : D = 0.0150, L = 0.060 ksf, Tributary Width = 6.0 ft, (DECK)

DESIGN SUMMARY

Design OK

Maximum Bending Stress Ratio	=	0.872 : 1	Maximum Shear Stress Ratio	=	0.339 : 1
Section used for this span		6x14	Section used for this span		6x14
fb: Actual	=	602.21 psi	fv: Actual	=	46.15 psi
F'b	=	690.90 psi	F'v	=	136.00 psi
Load Combination		+D+L	Load Combination		+D+L
Location of maximum on span	=	6.000 ft	Location of maximum on span	=	0.000 ft
Span # where maximum occurs	=	Span # 1	Span # where maximum occurs	=	Span # 1

Maximum Deflection

Max Downward Transient Deflection	0.121 in	Ratio =	1187 >=360	Span: 1 : L Only
Max Upward Transient Deflection	0 in	Ratio =	0 <360	n/a
Max Downward Total Deflection	0.157 in	Ratio =	917 >=240	Span: 1 : +D+L
Max Upward Total Deflection	0 in	Ratio =	0 <240	n/a

Maximum Forces & Stresses for Load Combinations

Load Combination		Max Stress Ratios										Moment Values			Shear Values		
Segment Length	Span #	M	V	CD	CM	C_t	CLx	C_F	Cfu	C_i	C_r	M	fb	F'b	V	fv	F'v
D Only														0.0	0.00	0.0	0.0
Length = 12.0 ft	1	0.220	0.086	0.90	1.00	1.00	1.00	0.987	1.00	0.80	1.00	1.90	136.8	621.8	0.52	10.5	122.4
+D+L					1.00	1.00	1.00	0.987	1.00	0.80	1.00			0.0	0.00	0.0	0.0
Length = 12.0 ft	1	0.872	0.339	1.00	1.00	1.00	1.00	0.987	1.00	0.80	1.00	8.38	602.2	690.9	2.28	46.2	136.0
+D+0.750L					1.00	1.00	1.00	0.987	1.00	0.80	1.00			0.0	0.00	0.0	0.0
Length = 12.0 ft	1	0.563	0.219	1.25	1.00	1.00	1.00	0.987	1.00	0.80	1.00	6.76	485.8	863.6	1.84	37.2	170.0
+0.60D					1.00	1.00	1.00	0.987	1.00	0.80	1.00			0.0	0.00	0.0	0.0
Length = 12.0 ft	1	0.074	0.029	1.60	1.00	1.00	1.00	0.987	1.00	0.80	1.00	1.14	82.1	1,105.4	0.31	6.3	217.6

Wood Beam

LIC# : KW-06016495, Build:20.23.08.30 CK Engineering LLC (c) ENERCALC INC 1983-2023

DESCRIPTION: BM#11

Overall Maximum Deflections

Load Combination	Span	Max. "-" Defl	Location in Span	Load Combination	Max. "+" Defl	Location in Span
+D+L	1	0.1570	6.044		0.0000	0.000

Maximum Deflections for Load Combinations

Load Combination	Span	Max. Downward Defl		Location in Span	Max. Upward Defl		Location in Span	
D Only	1	0.0356	in	6.044 ft	0.0000	in	0.000	ft
+D+L	1	0.1570	in	6.044 ft	0.0000	in	0.000	ft
+D+0.750L	1	0.1266	in	6.044 ft	0.0000	in	0.000	ft
+0.60D	1	0.0214	in	6.044 ft	0.0000	in	0.000	ft
L Only	1	0.1213	in	6.044 ft	0.0000	in	0.000	ft

Vertical Reactions

Support notation : Far left is #1 Values in KIPS

Load Combination	Support 1	Support 2
Max Upward from all Load Conditions	2.795	2.795
Max Upward from Load Combinations	2.795	2.795
Max Upward from Load Cases	2.160	2.160
D Only	0.635	0.635
+D+L	2.795	2.795
+D+0.750L	2.255	2.255
+0.60D	0.381	0.381
L Only	2.160	2.160

Project Title:
Engineer:
Project ID:
Project Descr:

Wood Beam

Project File: 23-043.ec6

LIC# : KW-06016495, Build:20.23.08.30 CK Engineering LLC (c) ENERCALC INC 1983-2023

DESCRIPTION: BM#12

CODE REFERENCES

Calculations per NDS 2018, IBC 2021, ASCE 7-16
Load Combination Set : IBC 2018

Material Properties

Analysis Method : Allowable Stress Design
Load Combination IBC 2018

Wood Species : DF/DF
Wood Grade : 24F-V4

Beam Bracing : Beam is Fully Braced against lateral-torsional buckling

Fb +	2,400.0 psi
Fb -	1,850.0 psi
Fc - Prll	1,650.0 psi
Fc - Perp	650.0 psi
Fv	265.0 psi
Ft	1,100.0 psi

E : Modulus of Elasticity

Ebend- xx	1,800.0 ksi
Eminbend - xx	950.0 ksi
Ebend- yy	1,600.0 ksi
Eminbend - yy	850.0 ksi
Density	31.210 pcf

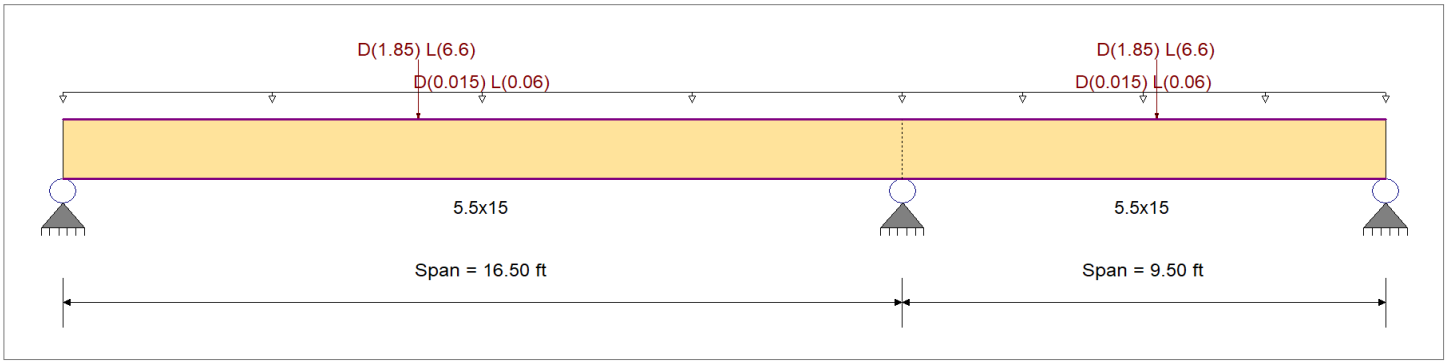

Applied Loads

Service loads entered. Load Factors will be applied for calculations.

Beam self weight calculated and added to loading
Load for Span Number 1
Uniform Load : D = 0.0150, L = 0.060 ksf, Tributary Width = 1.0 ft, (DECK)
Point Load : D = 1.850, L = 6.60 k @ 7.0 ft, (BM#8)
Load for Span Number 2
Uniform Load : D = 0.0150, L = 0.060 ksf, Tributary Width = 1.0 ft, (DECK)
Point Load : D = 1.850, L = 6.60 k @ 5.0 ft, (BM#8)

DESIGN SUMMARY

Design OK

Maximum Bending Stress Ratio	=	0.729 : 1	Maximum Shear Stress Ratio	=	0.464 : 1
Section used for this span		5.5x15	Section used for this span		5.5x15
fb: Actual	=	1,347.94 psi	fv: Actual	=	123.08 psi
F'b	=	1,850.00 psi	F'v	=	265.00 psi
Load Combination		+D+L	Load Combination		+D+L
Location of maximum on span	=	0.000 ft	Location of maximum on span	=	16.500 ft
Span # where maximum occurs	=	Span # 2	Span # where maximum occurs	=	Span # 1

Maximum Deflection

Max Downward Transient Deflection	0.229 in	Ratio =	864 >=360	Span: 2 : L Only
Max Upward Transient Deflection	-0.006 in	Ratio =	17681 >=360	Span: 2 : L Only
Max Downward Total Deflection	0.299 in	Ratio =	663 >=240	Span: 2 : +D+L
Max Upward Total Deflection	-0.009 in	Ratio =	13172 >=240	Span: 2 : +D+L

Maximum Forces & Stresses for Load Combinations

Load Combination / Segment Length	Span #	Max Stress Ratios M	V	CD	CM	C_t	CLx	C_V	Cfu	C_i	C_r	Moment Values M	fb	F'b	Shear Values V	fv	F'v
D Only														0.0	0.00	0.0	0.0
Length = 16.50 ft	1	0.169	0.119	0.90	1.00	1.00	1.00	0.995	1.00	1.00	1.00	6.25	363.9	2,148.7	1.56	28.4	238.5
Length = 9.50 ft	2	0.189	0.119	0.90	1.00	1.00	1.00	1.000	1.00	1.00	1.00	5.39	313.9	1,665.0	1.56	28.4	238.5
+D+L					1.00	1.00	1.00	1.000	1.00	1.00	1.00			0.0	0.00	0.0	0.0
Length = 16.50 ft	1	0.665	0.464	1.00	1.00	1.00	1.00	0.995	1.00	1.00	1.00	27.29	1,587.7	2,387.4	6.77	123.1	265.0
Length = 9.50 ft	2	0.729	0.464	1.00	1.00	1.00	1.00	1.000	1.00	1.00	1.00	23.17	1,347.9	1,850.0	6.77	123.1	265.0

Project Title:
Engineer:
Project ID:
Project Descr:

Wood Beam

Project File: 23-043.ec6

DESCRIPTION: BM#12

Maximum Forces & Stresses for Load Combinations

Load Combination / Segment Length	Span #	Max Stress Ratios M	V	CD	CM	C_t	CLx	C_V	Cfu	C_i	C_r	Moment Values M	fb	F'b	Shear Values V	fv	F'v
+D+0.750L					1.00	1.00	1.00	1.000	1.00	1.00	1.00			0.0	0.00	0.0	0.0
Length = 16.50 ft	1	0.430	0.300	1.25	1.00	1.00	1.00	0.995	1.00	1.00	1.00	22.03	1,281.7	2,984.3	5.47	99.4	331.3
Length = 9.50 ft	2	0.471	0.300	1.25	1.00	1.00	1.00	1.000	1.00	1.00	1.00	18.72	1,089.4	2,312.5	5.47	99.4	331.3
+0.60D					1.00	1.00	1.00	1.000	1.00	1.00	1.00			0.0	0.00	0.0	0.0
Length = 16.50 ft	1	0.057	0.040	1.60	1.00	1.00	1.00	0.995	1.00	1.00	1.00	3.75	218.3	3,819.9	0.94	17.0	424.0
Length = 9.50 ft	2	0.064	0.040	1.60	1.00	1.00	1.00	1.000	1.00	1.00	1.00	3.24	188.3	2,960.0	0.94	17.0	424.0

Overall Maximum Deflections

Load Combination	Span	Max. "-" Defl	Location in Span	Load Combination	Max. "+" Defl	Location in Span
+D+L	1	0.2986	7.190		0.0000	0.000
+D+L	2	0.0217	5.944	+D+L	-0.0087	1.274

Maximum Deflections for Load Combinations

Load Combination	Span	Max. Downward Defl		Location in Span	Max. Upward Defl		Location in Span	
D Only	1	0.0696	in	7.190 ft	0.0000	in	0.000	ft
D Only	2	0.0045	in	5.997 ft	-0.0022	in	1.327	ft
+D+L	1	0.2986	in	7.190 ft	0.0000	in	0.000	ft
+D+L	2	0.0217	in	5.944 ft	-0.0087	in	1.274	ft
+D+0.750L	1	0.2414	in	7.190 ft	0.0000	in	0.000	ft
+D+0.750L	2	0.0174	in	5.944 ft	-0.0070	in	1.274	ft
+0.60D	1	0.0417	in	7.190 ft	0.0000	in	0.000	ft
+0.60D	2	0.0027	in	5.997 ft	-0.0013	in	1.327	ft
L Only	1	0.2291	in	7.190 ft	0.0000	in	0.000	ft
L Only	2	0.0172	in	5.944 ft	-0.0064	in	1.221	ft

Vertical Reactions

Support notation : Far left is #1 Values in KIPS

Load Combination	Support 1	Support 2	Support 3
Max Upward from all Load Conditions	4.227	12.638	2.450
Max Upward from Load Combinations	4.227	12.638	2.450
Max Upward from Load Cases	3.218	9.654	1.888
D Only	1.009	2.983	0.562
+D+L	4.227	12.638	2.450
+D+0.750L	3.423	10.224	1.978
+0.60D	0.606	1.790	0.337
L Only	3.218	9.654	1.888

Project Title:
Engineer:
Project ID:
Project Descr:

Wood Beam

Project File: 23-043.ec6

LIC# : KW-06016495, Build:20.23.08.30 CK Engineering LLC (c) ENERCALC INC 1983-2023

DESCRIPTION: BM#13

CODE REFERENCES

Calculations per NDS 2018, IBC 2021, ASCE 7-16
Load Combination Set : IBC 2018

Material Properties

Analysis Method : Allowable Stress Design
Load Combination IBC 2018

Wood Species : DF/DF
Wood Grade : 24F-V4

Beam Bracing : Beam is Fully Braced against lateral-torsional buckling

Fb +	2,400.0 psi
Fb -	1,850.0 psi
Fc - Prll	1,650.0 psi
Fc - Perp	650.0 psi
Fv	265.0 psi
Ft	1,100.0 psi

E : Modulus of Elasticity

Ebend- xx	1,800.0 ksi
Eminbend - xx	950.0 ksi
Ebend- yy	1,600.0 ksi
Eminbend - yy	850.0 ksi
Density	31.210 pcf

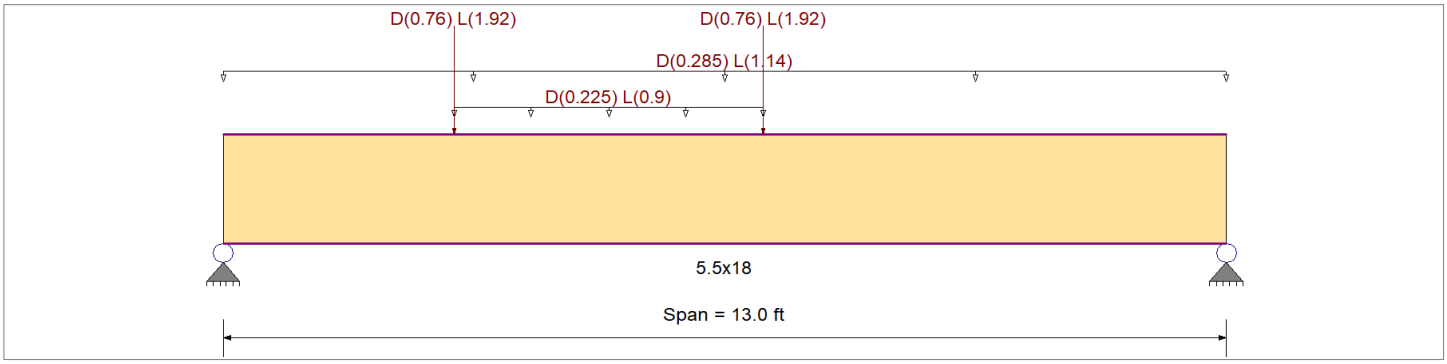

Applied Loads

Service loads entered. Load Factors will be applied for calculations.

Beam self weight calculated and added to loading
Load for Span Number 1
Uniform Load : D = 0.0150, L = 0.060 ksf, Extent = 3.0 -->> 7.0 ft, Tributary Width = 15.0 ft, (UPPER FLOOR)
Point Load : D = 0.760, L = 1.920 k @ 3.0 ft, (BM#9)
Point Load : D = 0.760, L = 1.920 k @ 7.0 ft, (BM#9)
Uniform Load : D = 0.0150, L = 0.060 ksf, Tributary Width = 19.0 ft, (MAIN FLOOR)

DESIGN SUMMARY

Design OK

Maximum Bending Stress Ratio	=	0.905 : 1	Maximum Shear Stress Ratio	=	0.763 : 1
Section used for this span		5.5x18	Section used for this span		5.5x18
fb: Actual	=	2,173.08 psi	fv: Actual	=	202.15 psi
F'b	=	2,400.00 psi	F'v	=	265.00 psi
Load Combination		+D+L	Load Combination		+D+L
Location of maximum on span	=	6.263 ft	Location of maximum on span	=	0.000 ft
Span # where maximum occurs	=	Span # 1	Span # where maximum occurs	=	Span # 1

Maximum Deflection

Max Downward Transient Deflection	0.258 in	Ratio =	604 >=360	Span: 1 : L Only
Max Upward Transient Deflection	0 in	Ratio =	0 <360	n/a
Max Downward Total Deflection	0.333 in	Ratio =	468 >=240	Span: 1 : +D+L
Max Upward Total Deflection	0 in	Ratio =	0 <240	n/a

Maximum Forces & Stresses for Load Combinations

Load Combination / Segment Length	Span #	Max Stress Ratios M	V	CD	CM	C_t	CLx	C_V	Cfu	C_i	C_r	Moment Values M	fb	F'b	Shear Values V	fv	F'v
D Only														0.0	0.00	0.0	0.0
Length = 13.0 ft	1	0.227	0.193	0.90	1.00	1.00	1.00	1.000	1.00	1.00	1.00	12.12	489.7	2,160.0	3.03	45.9	238.5
+D+L					1.00	1.00	1.00	1.000	1.00	1.00	1.00			0.0	0.00	0.0	0.0
Length = 13.0 ft	1	0.905	0.763	1.00	1.00	1.00	1.00	1.000	1.00	1.00	1.00	53.78	2,173.1	2,400.0	13.34	202.2	265.0
+D+0.750L					1.00	1.00	1.00	1.000	1.00	1.00	1.00			0.0	0.00	0.0	0.0
Length = 13.0 ft	1	0.584	0.492	1.25	1.00	1.00	1.00	1.000	1.00	1.00	1.00	43.37	1,752.2	3,000.0	10.76	163.1	331.3
+0.60D					1.00	1.00	1.00	1.000	1.00	1.00	1.00			0.0	0.00	0.0	0.0

Project Title:
Engineer:
Project ID:
Project Descr:

Wood Beam

Project File: 23-043.ec6

LIC# : KW-06016495, Build:20.23.08.30 CK Engineering LLC (c) ENERCALC INC 1983-2023

DESCRIPTION: BM#13

Maximum Forces & Stresses for Load Combinations

Load Combination		Max Stress Ratios										Moment Values			Shear Values		
Segment Length	Span #	M	V	CD	CM	C_t	CLx	C_V	Cfu	C_i	C_r	M	fb	F'b	V	fv	F'v
Length = 13.0 ft	**1**	0.077	0.065	1.60	1.00	1.00	1.00	1.000	1.00	1.00	1.00	7.27	293.8	3,840.0	1.82	27.5	424.0

Overall Maximum Deflections

Load Combination	Span	Max. "-" Defl	Location in Span	Load Combination	Max. "+" Defl	Location in Span
+D+L	1	0.3331	6.405		0.0000	0.000

Maximum Deflections for Load Combinations

Load Combination	Span	Max. Downward Defl		Location in Span	Max. Upward Defl		Location in Span	
D Only	1	0.0750	in	6.405 ft	0.0000	in	0.000	ft
+D+L	1	0.3331	in	6.405 ft	0.0000	in	0.000	ft
+D+0.750L	1	0.2686	in	6.405 ft	0.0000	in	0.000	ft
+0.60D	1	0.0450	in	6.405 ft	0.0000	in	0.000	ft
L Only	1	0.2581	in	6.405 ft	0.0000	in	0.000	ft

Vertical Reactions

Support notation : Far left is #1 Values in KIPS

Load Combination	Support 1	Support 2
Max Upward from all Load Conditions	15.470	13.194
Max Upward from Load Combinations	15.470	13.194
Max Upward from Load Cases	11.988	10.272
D Only	3.481	2.923
+D+L	15.470	13.194
+D+0.750L	12.473	10.626
+0.60D	2.089	1.754
L Only	11.988	10.272

Project Title:
Engineer:
Project ID:
Project Descr:

Wood Beam

Project File: 23-043.ec6

LIC# : KW-06016495, Build:20.23.08.30 CK Engineering LLC (c) ENERCALC INC 1983-2023

DESCRIPTION: BM#14

CODE REFERENCES

Calculations per NDS 2018, IBC 2021, ASCE 7-16
Load Combination Set : IBC 2018

Material Properties

Analysis Method :	Allowable Stress Design	Fb +	2900 psi	*E : Modulus of Elasticity*	
Load Combination	IBC 2018	Fb -	2900 psi	Ebend- xx	2000 ksi
		Fc - Prll	2900 psi	Eminbend - xx	1016.535 ksi
Wood Species :	iLevel Truss Joist	Fc - Perp	750 psi		
Wood Grade :	Parallam PSL 2.0E	Fv	290 psi		
		Ft	2025 psi	Density	45.07 pcf
Beam Bracing :	Beam is Fully Braced against lateral-torsional buckling				

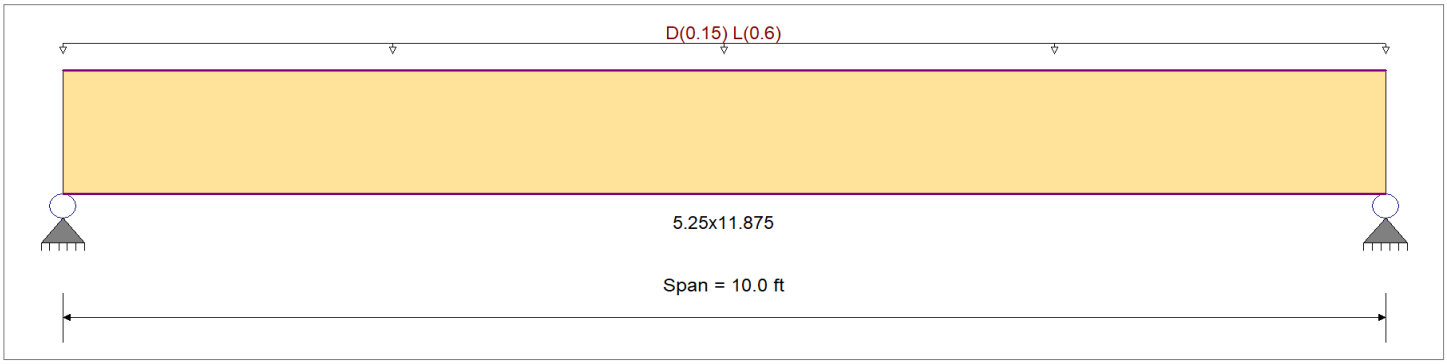

Applied Loads

Service loads entered. Load Factors will be applied for calculations.

Beam self weight calculated and added to loading
Uniform Load : D = 0.0150, L = 0.060 ksf, Tributary Width = 10.0 ft, (FLOOR)

DESIGN SUMMARY

Design OK

Maximum Bending Stress Ratio	=	0.322 : 1	Maximum Shear Stress Ratio	=	0.256 : 1
Section used for this span		5.25x11.875	Section used for this span		5.25x11.875
fb: Actual	=	935.47 psi	fv: Actual	=	74.33 psi
F'b	=	2,903.37 psi	F'v	=	290.00 psi
Load Combination		+D+L	Load Combination		+D+L
Location of maximum on span	=	5.000 ft	Location of maximum on span	=	0.000 ft
Span # where maximum occurs	=	Span # 1	Span # where maximum occurs	=	Span # 1

Maximum Deflection

Max Downward Transient Deflection	0.093 in	Ratio =	1294 >=360	Span: 1 : L Only
Max Upward Transient Deflection	0 in	Ratio =	0 <360	n/a
Max Downward Total Deflection	0.119 in	Ratio =	1009 >=240	Span: 1 : +D+L
Max Upward Total Deflection	0 in	Ratio =	0 <240	n/a

Maximum Forces & Stresses for Load Combinations

Load Combination		Max Stress Ratios										Moment Values			Shear Values		
Segment Length	Span #	M	V	CD	CM	C_t	CLx	C_F	Cfu	C_i	C_r	M	fb	F'b	V	fv	F'v
D Only														0.0	0.00	0.0	0.0
Length = 10.0 ft	1	0.079	0.063	0.90	1.00	1.00	1.00	1.001	1.00	1.00	1.00	2.12	206.1	2,613.0	0.68	16.4	261.0
+D+L					1.00	1.00	1.00	1.001	1.00	1.00	1.00			0.0	0.00	0.0	0.0
Length = 10.0 ft	1	0.322	0.256	1.00	1.00	1.00	1.00	1.001	1.00	1.00	1.00	9.62	935.5	2,903.4	3.09	74.3	290.0
+D+0.750L					1.00	1.00	1.00	1.001	1.00	1.00	1.00			0.0	0.00	0.0	0.0
Length = 10.0 ft	1	0.208	0.165	1.25	1.00	1.00	1.00	1.001	1.00	1.00	1.00	7.74	753.1	3,629.2	2.49	59.8	362.5
+0.60D					1.00	1.00	1.00	1.001	1.00	1.00	1.00			0.0	0.00	0.0	0.0
Length = 10.0 ft	1	0.027	0.021	1.60	1.00	1.00	1.00	1.001	1.00	1.00	1.00	1.27	123.6	4,645.4	0.41	9.8	464.0

Project Title:
Engineer:
Project ID:
Project Descr:

Wood Beam

Project File: 23-043.ec6

LIC# : KW-06016495, Build:20.23.08.30 CK Engineering LLC (c) ENERCALC INC 1983-2023

DESCRIPTION: BM#14

Overall Maximum Deflections

Load Combination	Span	Max. "-" Defl	Location in Span	Load Combination	Max. "+" Defl	Location in Span
+D+L	1	0.1189	5.036		0.0000	0.000

Maximum Deflections for Load Combinations

Load Combination	Span	Max. Downward Defl		Location in Span	Max. Upward Defl		Location in Span	
D Only	1	0.0262	in	5.036 ft	0.0000	in	0.000	ft
+D+L	1	0.1189	in	5.036 ft	0.0000	in	0.000	ft
+D+0.750L	1	0.0957	in	5.036 ft	0.0000	in	0.000	ft
+0.60D	1	0.0157	in	5.036 ft	0.0000	in	0.000	ft
L Only	1	0.0927	in	5.036 ft	0.0000	in	0.000	ft

Vertical Reactions

Support notation : Far left is #1 Values in KIPS

Load Combination	Support 1	Support 2
Max Upward from all Load Conditions	3.848	3.848
Max Upward from Load Combinations	3.848	3.848
Max Upward from Load Cases	3.000	3.000
D Only	0.848	0.848
+D+L	3.848	3.848
+D+0.750L	3.098	3.098
+0.60D	0.509	0.509
L Only	3.000	3.000

Project Title:
Engineer:
Project ID:
Project Descr:

General Footing

Project File: 23-043.ec6

LIC# : KW-06016495, Build:20.23.08.30 CK Engineering LLC (c) ENERCALC INC 1983-2023

DESCRIPTION: FTNG#1

Code References

Calculations per ACI 318-19, IBC 2021, ASCE 7-16
Load Combinations Used : IBC 2018

General Information

Material Properties

f'c : Concrete 28 day strength	=	2.50	ksi
fy : Rebar Yield	=	40.0	ksi
Ec : Concrete Elastic Modulus	=	3,122.0	ksi
Concrete Density	=	145.0	pcf
φ Values Flexure	=	0.90	
Shear	=	0.750	

Analysis Settings

Min Steel % Bending Reinf.	=	
Min Allow % Temp Reinf.	=	0.00180
Min. Overturning Safety Factor	=	1.0 : 1
Min. Sliding Safety Factor	=	1.0 : 1
Add Ftg Wt for Soil Pressure	:	Yes
Use ftg wt for stability, moments & shears	:	Yes
Add Pedestal Wt for Soil Pressure	:	No
Use Pedestal wt for stability, mom & shear	:	No

Soil Design Values

Allowable Soil Bearing	=	1.50	ksf
Soil Density	=	110.0	pcf
Increase Bearing By Footing Weight	=	No	
Soil Passive Resistance (for Sliding)	=	150.0	pcf
Soil/Concrete Friction Coeff.	=	0.250	

Increases based on footing Depth

Footing base depth below soil surface	=	ft
Allow press. increase per foot of depth	=	ksf
when footing base is below	=	ft

Increases based on footing plan dimension

Allowable pressure increase per foot of depth	=	ksf
when max. length or width is greater than	=	ft

Dimensions

Width parallel to X-X Axis	=	2.50 ft
Length parallel to Z-Z Axis	=	2.50 ft
Footing Thickness	=	10.0 in

Pedestal dimensions...

px : parallel to X-X Axis	=	in
pz : parallel to Z-Z Axis	=	in
Height	=	in

Rebar Centerline to Edge of Concrete...

at Bottom of footing	=	3.0 in

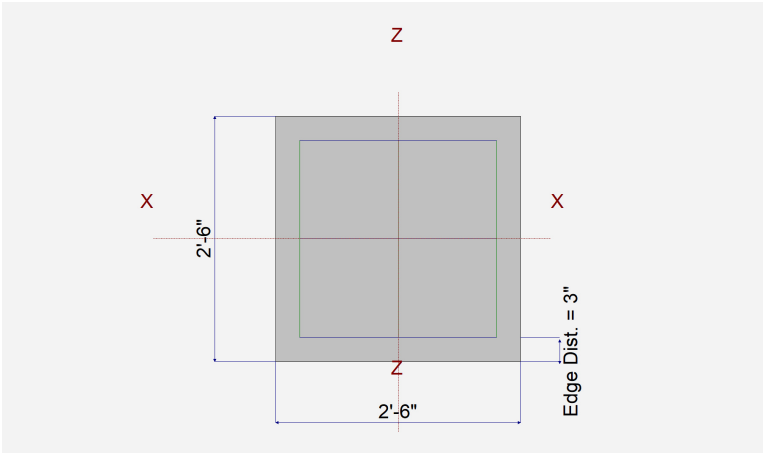

Reinforcing

Bars parallel to X-X Axis			
Number of Bars	=		3.0
Reinforcing Bar Size	=	#	4
Bars parallel to Z-Z Axis			
Number of Bars	=		3.0
Reinforcing Bar Size	=	#	4

Bandwidth Distribution Check (ACI 15.4.4.2)

Direction Requiring Closer Separation	n/a
# Bars required within zone	n/a
# Bars required on each side of zone	n/a

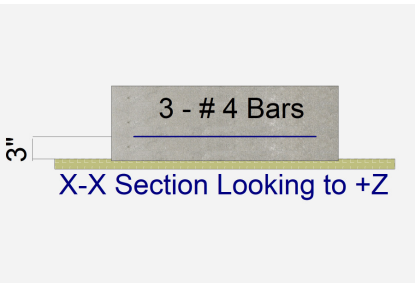

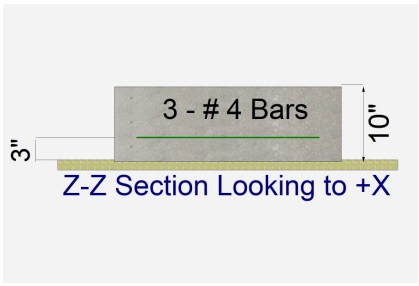

Applied Loads

		D	Lr	L	S	W	E	H	
P : Column Load	=	1.50		6.20					k
OB : Overburden	=								ksf
M-xx	=								k-ft
M-zz	=								k-ft
V-x	=								k
V-z	=								k

Project Title:
Engineer:
Project ID:
Project Descr:

General Footing

Project File: 23-043.ec6

LIC# : KW-06016495, Build:20.23.08.30 CK Engineering LLC (c) ENERCALC INC 1983-2023

DESCRIPTION: FTNG#1

DESIGN SUMMARY

Design OK

	Min. Ratio	Item	Applied	Capacity	Governing Load Combination
PASS	0.9020	Soil Bearing	1.353 ksf	1.50 ksf	+D+L about Z-Z axis
PASS	n/a	Overturning - X-X	0.0 k-ft	0.0 k-ft	No Overturning
PASS	n/a	Overturning - Z-Z	0.0 k-ft	0.0 k-ft	No Overturning
PASS	n/a	Sliding - X-X	0.0 k	0.0 k	No Sliding
PASS	n/a	Sliding - Z-Z	0.0 k	0.0 k	No Sliding
PASS	n/a	Uplift	0.0 k	0.0 k	No Uplift
PASS	0.2987	Z Flexure (+X)	1.465 k-ft/ft	4.904 k-ft/ft	+1.20D+1.60L
PASS	0.2987	Z Flexure (-X)	1.465 k-ft/ft	4.904 k-ft/ft	+1.20D+1.60L
PASS	0.2987	X Flexure (+Z)	1.465 k-ft/ft	4.904 k-ft/ft	+1.20D+1.60L
PASS	0.2987	X Flexure (-Z)	1.465 k-ft/ft	4.904 k-ft/ft	+1.20D+1.60L
PASS	0.2009	1-way Shear (+X)	15.069 psi	75.0 psi	+1.20D+1.60L
PASS	0.2009	1-way Shear (-X)	15.069 psi	75.0 psi	+1.20D+1.60L
PASS	0.2009	1-way Shear (+Z)	15.069 psi	75.0 psi	+1.20D+1.60L
PASS	0.2009	1-way Shear (-Z)	15.069 psi	75.0 psi	+1.20D+1.60L
PASS	0.3757	2-way Punching	56.352 psi	150.0 psi	+1.20D+1.60L

Detailed Results

Soil Bearing

Rotation Axis & Load Combination...	Gross Allowable	Xecc (in)	Zecc (in)	Actual Soil Bearing Stress @ Location Bottom, -Z	Top, +Z	Left, -X	Right, +X	Actual / Allow Ratio
X-X, D Only	1.50	n/a	0.0	0.3608	0.3608	n/a	n/a	0.241
X-X, +D+L	1.50	n/a	0.0	1.353	1.353	n/a	n/a	0.902
X-X, +D+0.750L	1.50	n/a	0.0	1.105	1.105	n/a	n/a	0.737
X-X, +0.60D	1.50	n/a	0.0	0.2165	0.2165	n/a	n/a	0.144
Z-Z, D Only	1.50	0.0	n/a	n/a	n/a	0.3608	0.3608	0.241
Z-Z, +D+L	1.50	0.0	n/a	n/a	n/a	1.353	1.353	0.902
Z-Z, +D+0.750L	1.50	0.0	n/a	n/a	n/a	1.105	1.105	0.737
Z-Z, +0.60D	1.50	0.0	n/a	n/a	n/a	0.2165	0.2165	0.144

Overturning Stability

Rotation Axis & Load Combination...	Overturning Moment	Resisting Moment	Stability Ratio	Status
Footing Has NO Overturning				

Sliding Stability

All units k

Force Application Axis Load Combination...	Sliding Force	Resisting Force	Stability Ratio	Status
Footing Has NO Sliding				

Footing Flexure

Flexure Axis & Load Combination	Mu k-ft	Side	Tension Surface	As Req'd in^2	Gvrn. As in^2	Actual As in^2	Phi*Mn k-ft	Status
X-X, +1.40D	0.2625	+Z	Bottom	0.2160	AsMin	0.240	4.904	OK
X-X, +1.40D	0.2625	-Z	Bottom	0.2160	AsMin	0.240	4.904	OK
X-X, +1.20D+1.60L	1.465	+Z	Bottom	0.2160	AsMin	0.240	4.904	OK
X-X, +1.20D+1.60L	1.465	-Z	Bottom	0.2160	AsMin	0.240	4.904	OK
X-X, +1.20D+0.50L	0.6125	+Z	Bottom	0.2160	AsMin	0.240	4.904	OK
X-X, +1.20D+0.50L	0.6125	-Z	Bottom	0.2160	AsMin	0.240	4.904	OK
X-X, +1.20D	0.2250	+Z	Bottom	0.2160	AsMin	0.240	4.904	OK
X-X, +1.20D	0.2250	-Z	Bottom	0.2160	AsMin	0.240	4.904	OK
X-X, +0.90D	0.1688	+Z	Bottom	0.2160	AsMin	0.240	4.904	OK
X-X, +0.90D	0.1688	-Z	Bottom	0.2160	AsMin	0.240	4.904	OK
Z-Z, +1.40D	0.2625	-X	Bottom	0.2160	AsMin	0.240	4.904	OK
Z-Z, +1.40D	0.2625	+X	Bottom	0.2160	AsMin	0.240	4.904	OK
Z-Z, +1.20D+1.60L	1.465	-X	Bottom	0.2160	AsMin	0.240	4.904	OK
Z-Z, +1.20D+1.60L	1.465	+X	Bottom	0.2160	AsMin	0.240	4.904	OK
Z-Z, +1.20D+0.50L	0.6125	-X	Bottom	0.2160	AsMin	0.240	4.904	OK
Z-Z, +1.20D+0.50L	0.6125	+X	Bottom	0.2160	AsMin	0.240	4.904	OK
Z-Z, +1.20D	0.2250	-X	Bottom	0.2160	AsMin	0.240	4.904	OK

Project Title:
Engineer:
Project ID:
Project Descr:

General Footing

Project File: 23-043.ec6

LIC# : KW-06016495, Build:20.23.08.30 CK Engineering LLC (c) ENERCALC INC 1983-2023

DESCRIPTION: FTNG#1

Footing Flexure

Flexure Axis & Load Combination	Mu k-ft	Side	Tension Surface	As Req'd in^2	Gvrn. As in^2	Actual As in^2	Phi*Mn k-ft	Status
Z-Z, +1.20D	0.2250	+X	Bottom	0.2160	AsMin	0.240	4.904	OK
Z-Z, +0.90D	0.1688	-X	Bottom	0.2160	AsMin	0.240	4.904	OK
Z-Z, +0.90D	0.1688	+X	Bottom	0.2160	AsMin	0.240	4.904	OK

One Way Shear

Load Combination...	Vu @ -X	Vu @ +X	Vu @ -Z	Vu @ +Z	Vu:Max	Phi Vn	Vu / Phi*Vn	Status
+1.40D	2.70 psi	2.70 psi	2.70 psi	2.70 psi	2.70 psi	75.00 psi	0.04	OK
+1.20D+1.60L	15.07 psi	15.07 psi	15.07 psi	15.07 psi	15.07 psi	75.00 psi	0.20	OK
+1.20D+0.50L	6.30 psi	6.30 psi	6.30 psi	6.30 psi	6.30 psi	75.00 psi	0.08	OK
+1.20D	2.31 psi	2.31 psi	2.31 psi	2.31 psi	2.31 psi	75.00 psi	0.03	OK
+0.90D	1.74 psi	1.74 psi	1.74 psi	1.74 psi	1.74 psi	75.00 psi	0.02	OK

Two-Way "Punching" Shear

All units k

Load Combination...	Vu	Phi*Vn	Vu / Phi*Vn	Status
+1.40D	10.10 psi	150.00 psi	0.06731	OK
+1.20D+1.60L	56.35 psi	150.00 psi	0.3757	OK
+1.20D+0.50L	23.56 psi	150.00 psi	0.1571	OK
+1.20D	8.66 psi	150.00 psi	0.0577	OK
+0.90D	6.49 psi	150.00 psi	0.04327	OK

Project Title:
Engineer:
Project ID:
Project Descr:

General Footing

Project File: 23-043.ec6

LIC# : KW-06016495, Build:20.23.08.30 CK Engineering LLC (c) ENERCALC INC 1983-2023

DESCRIPTION: FTNG#2

Code References

Calculations per ACI 318-19, IBC 2021, ASCE 7-16
Load Combinations Used : IBC 2018

General Information

Material Properties

f'c : Concrete 28 day strength	=	2.50	ksi
fy : Rebar Yield	=	40.0	ksi
Ec : Concrete Elastic Modulus	=	3,122.0	ksi
Concrete Density	=	145.0	pcf
φ Values Flexure	=	0.90	
Shear	=	0.750	

Analysis Settings

Min Steel % Bending Reinf.	=	
Min Allow % Temp Reinf.	=	0.00180
Min. Overturning Safety Factor	=	1.0 : 1
Min. Sliding Safety Factor	=	1.0 : 1
Add Ftg Wt for Soil Pressure	:	Yes
Use ftg wt for stability, moments & shears	:	Yes
Add Pedestal Wt for Soil Pressure	:	No
Use Pedestal wt for stability, mom & shear	:	No

Soil Design Values

Allowable Soil Bearing	=	1.50	ksf
Soil Density	=	110.0	pcf
Increase Bearing By Footing Weight	=	No	
Soil Passive Resistance (for Sliding)	=	150.0	pcf
Soil/Concrete Friction Coeff.	=	0.250	

Increases based on footing Depth

Footing base depth below soil surface	=	ft
Allow press. increase per foot of depth	=	ksf
when footing base is below	=	ft

Increases based on footing plan dimension

Allowable pressure increase per foot of depth	=	ksf
when max. length or width is greater than	=	ft

Dimensions

Width parallel to X-X Axis	=	3.0 ft
Length parallel to Z-Z Axis	=	3.0 ft
Footing Thickness	=	10.0 in

Pedestal dimensions...

px : parallel to X-X Axis	=	in
pz : parallel to Z-Z Axis	=	in
Height	=	in

Rebar Centerline to Edge of Concrete...

at Bottom of footing	=	3.0 in

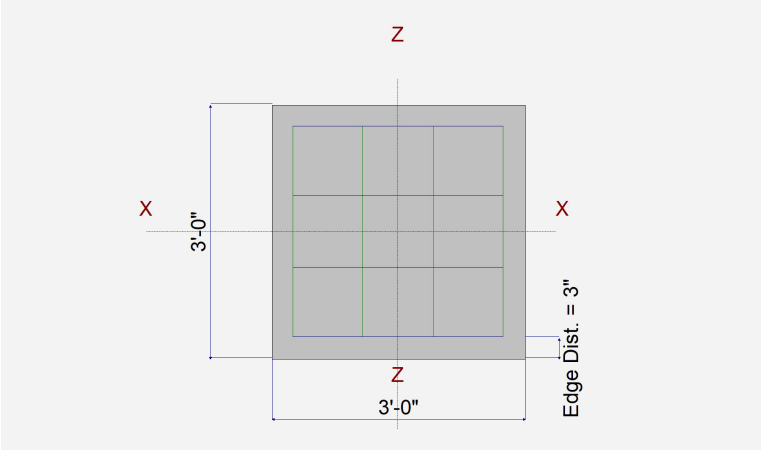

Reinforcing

Bars parallel to X-X Axis			
Number of Bars	=		4
Reinforcing Bar Size	=	#	4
Bars parallel to Z-Z Axis			
Number of Bars	=		4
Reinforcing Bar Size	=	#	4

Bandwidth Distribution Check (ACI 15.4.4.2)

Direction Requiring Closer Separation	n/a
# Bars required within zone	n/a
# Bars required on each side of zone	n/a

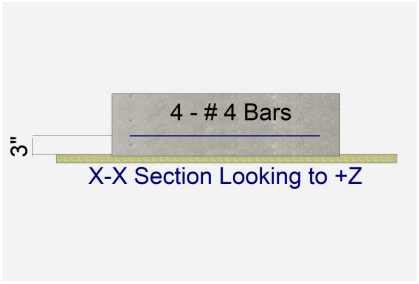

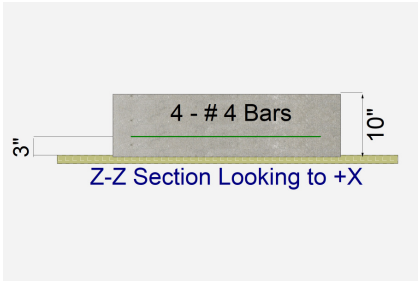

Applied Loads

		D	Lr	L	S	W	E	H	
P : Column Load	=	2.750		6.60	3.310				k
OB : Overburden	=								ksf
M-xx	=								k-ft
M-zz	=								k-ft
V-x	=								k
V-z	=								k

Project Title:
Engineer:
Project ID:
Project Descr:

General Footing

Project File: 23-043.ec6

DESCRIPTION: FTNG#2

DESIGN SUMMARY

Design OK

	Min. Ratio	Item	Applied	Capacity	Governing Load Combination
PASS	0.8347	Soil Bearing	1.252 ksf	1.50 ksf	+D+0.750L+0.750S about Z-Z axis
PASS	n/a	Overturning - X-X	0.0 k-ft	0.0 k-ft	No Overturning
PASS	n/a	Overturning - Z-Z	0.0 k-ft	0.0 k-ft	No Overturning
PASS	n/a	Sliding - X-X	0.0 k	0.0 k	No Sliding
PASS	n/a	Sliding - Z-Z	0.0 k	0.0 k	No Sliding
PASS	n/a	Uplift	0.0 k	0.0 k	No Uplift
PASS	0.3570	Z Flexure (+X)	1.939 k-ft/ft	5.433 k-ft/ft	+1.20D+1.60L+0.50S
PASS	0.3570	Z Flexure (-X)	1.939 k-ft/ft	5.433 k-ft/ft	+1.20D+1.60L+0.50S
PASS	0.3570	X Flexure (+Z)	1.939 k-ft/ft	5.433 k-ft/ft	+1.20D+1.60L+0.50S
PASS	0.3570	X Flexure (-Z)	1.939 k-ft/ft	5.433 k-ft/ft	+1.20D+1.60L+0.50S
PASS	0.2545	1-way Shear (+X)	19.086 psi	75.0 psi	+1.20D+1.60L+0.50S
PASS	0.2545	1-way Shear (-X)	19.086 psi	75.0 psi	+1.20D+1.60L+0.50S
PASS	0.2545	1-way Shear (+Z)	19.086 psi	75.0 psi	+1.20D+1.60L+0.50S
PASS	0.2545	1-way Shear (-Z)	19.086 psi	75.0 psi	+1.20D+1.60L+0.50S
PASS	0.5066	2-way Punching	75.992 psi	150.0 psi	+1.20D+1.60L+0.50S

Detailed Results

Soil Bearing

Rotation Axis & Load Combination...	Gross Allowable	Xecc (in)	Zecc (in)	Actual Soil Bearing Stress @ Location Bottom, -Z	Top, +Z	Left, -X	Right, +X	Actual / Allow Ratio
X-X, D Only	1.50	n/a	0.0	0.4264	0.4264	n/a	n/a	0.284
X-X, +D+L	1.50	n/a	0.0	1.160	1.160	n/a	n/a	0.773
X-X, +D+S	1.50	n/a	0.0	0.7942	0.7942	n/a	n/a	0.530
X-X, +D+0.750L	1.50	n/a	0.0	0.9764	0.9764	n/a	n/a	0.651
X-X, +D+0.750L+0.750S	1.50	n/a	0.0	1.252	1.252	n/a	n/a	0.835
X-X, +0.60D	1.50	n/a	0.0	0.2558	0.2558	n/a	n/a	0.171
Z-Z, D Only	1.50	0.0	n/a	n/a	n/a	0.4264	0.4264	0.284
Z-Z, +D+L	1.50	0.0	n/a	n/a	n/a	1.160	1.160	0.773
Z-Z, +D+S	1.50	0.0	n/a	n/a	n/a	0.7942	0.7942	0.530
Z-Z, +D+0.750L	1.50	0.0	n/a	n/a	n/a	0.9764	0.9764	0.651
Z-Z, +D+0.750L+0.750S	1.50	0.0	n/a	n/a	n/a	1.252	1.252	0.835
Z-Z, +0.60D	1.50	0.0	n/a	n/a	n/a	0.2558	0.2558	0.171

Overturning Stability

Rotation Axis & Load Combination...	Overturning Moment	Resisting Moment	Stability Ratio	Status
Footing Has NO Overturning				

All units k

Sliding Stability

Force Application Axis Load Combination...	Sliding Force	Resisting Force	Stability Ratio	Status
Footing Has NO Sliding				

Footing Flexure

Flexure Axis & Load Combination	Mu k-ft	Side	Tension Surface	As Req'd in^2	Gvrn. As in^2	Actual As in^2	Phi*Mn k-ft	Status
X-X, +1.40D	0.4813	+Z	Bottom	0.2160	AsMin	0.2667	5.433	OK
X-X, +1.40D	0.4813	-Z	Bottom	0.2160	AsMin	0.2667	5.433	OK
X-X, +1.20D+1.60L	1.733	+Z	Bottom	0.2160	AsMin	0.2667	5.433	OK
X-X, +1.20D+1.60L	1.733	-Z	Bottom	0.2160	AsMin	0.2667	5.433	OK
X-X, +1.20D+1.60L+0.50S	1.939	+Z	Bottom	0.2160	AsMin	0.2667	5.433	OK
X-X, +1.20D+1.60L+0.50S	1.939	-Z	Bottom	0.2160	AsMin	0.2667	5.433	OK
X-X, +1.20D+0.50L	0.8250	+Z	Bottom	0.2160	AsMin	0.2667	5.433	OK
X-X, +1.20D+0.50L	0.8250	-Z	Bottom	0.2160	AsMin	0.2667	5.433	OK
X-X, +1.20D	0.4125	+Z	Bottom	0.2160	AsMin	0.2667	5.433	OK
X-X, +1.20D	0.4125	-Z	Bottom	0.2160	AsMin	0.2667	5.433	OK
X-X, +1.20D+0.50L+1.60S	1.487	+Z	Bottom	0.2160	AsMin	0.2667	5.433	OK
X-X, +1.20D+0.50L+1.60S	1.487	-Z	Bottom	0.2160	AsMin	0.2667	5.433	OK
X-X, +1.20D+1.60S	1.075	+Z	Bottom	0.2160	AsMin	0.2667	5.433	OK

Project Title:
Engineer:
Project ID:
Project Descr:

General Footing

Project File: 23-043.ec6

DESCRIPTION: FTNG#2

Footing Flexure

Flexure Axis & Load Combination	Mu k-ft	Side	Tension Surface	As Req'd in^2	Gvrn. As in^2	Actual As in^2	Phi*Mn k-ft	Status
X-X, +1.20D+1.60S	1.075	-Z	Bottom	0.2160	AsMin	0.2667	5.433	OK
X-X, +1.20D+0.50L+0.50S	1.032	+Z	Bottom	0.2160	AsMin	0.2667	5.433	OK
X-X, +1.20D+0.50L+0.50S	1.032	-Z	Bottom	0.2160	AsMin	0.2667	5.433	OK
X-X, +1.20D+0.50L+0.70S	1.115	+Z	Bottom	0.2160	AsMin	0.2667	5.433	OK
X-X, +1.20D+0.50L+0.70S	1.115	-Z	Bottom	0.2160	AsMin	0.2667	5.433	OK
X-X, +0.90D	0.3094	+Z	Bottom	0.2160	AsMin	0.2667	5.433	OK
X-X, +0.90D	0.3094	-Z	Bottom	0.2160	AsMin	0.2667	5.433	OK
Z-Z, +1.40D	0.4813	-X	Bottom	0.2160	AsMin	0.2667	5.433	OK
Z-Z, +1.40D	0.4813	+X	Bottom	0.2160	AsMin	0.2667	5.433	OK
Z-Z, +1.20D+1.60L	1.733	-X	Bottom	0.2160	AsMin	0.2667	5.433	OK
Z-Z, +1.20D+1.60L	1.733	+X	Bottom	0.2160	AsMin	0.2667	5.433	OK
Z-Z, +1.20D+1.60L+0.50S	1.939	-X	Bottom	0.2160	AsMin	0.2667	5.433	OK
Z-Z, +1.20D+1.60L+0.50S	1.939	+X	Bottom	0.2160	AsMin	0.2667	5.433	OK
Z-Z, +1.20D+0.50L	0.8250	-X	Bottom	0.2160	AsMin	0.2667	5.433	OK
Z-Z, +1.20D+0.50L	0.8250	+X	Bottom	0.2160	AsMin	0.2667	5.433	OK
Z-Z, +1.20D	0.4125	-X	Bottom	0.2160	AsMin	0.2667	5.433	OK
Z-Z, +1.20D	0.4125	+X	Bottom	0.2160	AsMin	0.2667	5.433	OK
Z-Z, +1.20D+0.50L+1.60S	1.487	-X	Bottom	0.2160	AsMin	0.2667	5.433	OK
Z-Z, +1.20D+0.50L+1.60S	1.487	+X	Bottom	0.2160	AsMin	0.2667	5.433	OK
Z-Z, +1.20D+1.60S	1.075	-X	Bottom	0.2160	AsMin	0.2667	5.433	OK
Z-Z, +1.20D+1.60S	1.075	+X	Bottom	0.2160	AsMin	0.2667	5.433	OK
Z-Z, +1.20D+0.50L+0.50S	1.032	-X	Bottom	0.2160	AsMin	0.2667	5.433	OK
Z-Z, +1.20D+0.50L+0.50S	1.032	+X	Bottom	0.2160	AsMin	0.2667	5.433	OK
Z-Z, +1.20D+0.50L+0.70S	1.115	-X	Bottom	0.2160	AsMin	0.2667	5.433	OK
Z-Z, +1.20D+0.50L+0.70S	1.115	+X	Bottom	0.2160	AsMin	0.2667	5.433	OK
Z-Z, +0.90D	0.3094	-X	Bottom	0.2160	AsMin	0.2667	5.433	OK
Z-Z, +0.90D	0.3094	+X	Bottom	0.2160	AsMin	0.2667	5.433	OK

One Way Shear

Load Combination...	Vu @ -X	Vu @ +X	Vu @ -Z	Vu @ +Z	Vu:Max	Phi Vn	Vu / Phi*Vn	Status
+1.40D	4.74 psi	4.74 psi	4.74 psi	4.74 psi	4.74 psi	75.00 psi	0.06	OK
+1.20D+1.60L	17.05 psi	17.05 psi	17.05 psi	17.05 psi	17.05 psi	75.00 psi	0.23	OK
+1.20D+1.60L+0.50S	19.09 psi	19.09 psi	19.09 psi	19.09 psi	19.09 psi	75.00 psi	0.25	OK
+1.20D+0.50L	8.12 psi	8.12 psi	8.12 psi	8.12 psi	8.12 psi	75.00 psi	0.11	OK
+1.20D	4.06 psi	4.06 psi	4.06 psi	4.06 psi	4.06 psi	75.00 psi	0.05	OK
+1.20D+0.50L+1.60S	14.63 psi	14.63 psi	14.63 psi	14.63 psi	14.63 psi	75.00 psi	0.20	OK
+1.20D+1.60S	10.57 psi	10.57 psi	10.57 psi	10.57 psi	10.57 psi	75.00 psi	0.14	OK
+1.20D+0.50L+0.50S	10.16 psi	10.16 psi	10.16 psi	10.16 psi	10.16 psi	75.00 psi	0.14	OK
+1.20D+0.50L+0.70S	10.97 psi	10.97 psi	10.97 psi	10.97 psi	10.97 psi	75.00 psi	0.15	OK
+0.90D	3.05 psi	3.05 psi	3.05 psi	3.05 psi	3.05 psi	75.00 psi	0.04	OK

Two-Way "Punching" Shear

All units k

Load Combination...	Vu	Phi*Vn	Vu / Phi*Vn	Status
+1.40D	18.86 psi	150.00 psi	0.1257	OK
+1.20D+1.60L	67.89 psi	150.00 psi	0.4526	OK
+1.20D+1.60L+0.50S	75.99 psi	150.00 psi	0.5066	OK
+1.20D+0.50L	32.33 psi	150.00 psi	0.2155	OK
+1.20D	16.16 psi	150.00 psi	0.1078	OK
+1.20D+0.50L+1.60S	58.27 psi	150.00 psi	0.3884	OK
+1.20D+1.60S	42.10 psi	150.00 psi	0.2807	OK
+1.20D+0.50L+0.50S	40.43 psi	150.00 psi	0.2696	OK
+1.20D+0.50L+0.70S	43.68 psi	150.00 psi	0.2912	OK
+0.90D	12.12 psi	150.00 psi	0.08082	OK

Project Title:
Engineer:
Project ID:
Project Descr:

General Footing

Project File: 23-043.ec6

LIC# : KW-06016495, Build:20.23.08.30 CK Engineering LLC (c) ENERCALC INC 1983-2023

DESCRIPTION: FTNG#3

Code References

Calculations per ACI 318-19, IBC 2021, ASCE 7-16
Load Combinations Used : IBC 2018

General Information

Material Properties

f'c : Concrete 28 day strength	=	2.50	ksi
fy : Rebar Yield	=	40.0	ksi
Ec : Concrete Elastic Modulus	=	3,122.0	ksi
Concrete Density	=	145.0	pcf
φ Values Flexure	=	0.90	
Shear	=	0.750	

Analysis Settings

Min Steel % Bending Reinf.	=	
Min Allow % Temp Reinf.	=	0.00180
Min. Overturning Safety Factor	=	1.0 : 1
Min. Sliding Safety Factor	=	1.0 : 1
Add Ftg Wt for Soil Pressure	:	Yes
Use ftg wt for stability, moments & shears	:	Yes
Add Pedestal Wt for Soil Pressure	:	No
Use Pedestal wt for stability, mom & shear	:	No

Soil Design Values

Allowable Soil Bearing	=	1.50	ksf
Soil Density	=	110.0	pcf
Increase Bearing By Footing Weight	=	No	
Soil Passive Resistance (for Sliding)	=	150.0	pcf
Soil/Concrete Friction Coeff.	=	0.250	

Increases based on footing Depth

Footing base depth below soil surface	=	ft
Allow press. increase per foot of depth	=	ksf
when footing base is below	=	ft

Increases based on footing plan dimension

Allowable pressure increase per foot of depth	=	ksf
when max. length or width is greater than	=	ft

Dimensions

Width parallel to X-X Axis	=	3.50 ft
Length parallel to Z-Z Axis	=	3.50 ft
Footing Thickness	=	10.0 in

Pedestal dimensions...

px : parallel to X-X Axis	=	in
pz : parallel to Z-Z Axis	=	in
Height	=	in

Rebar Centerline to Edge of Concrete...

at Bottom of footing	=	3.0 in

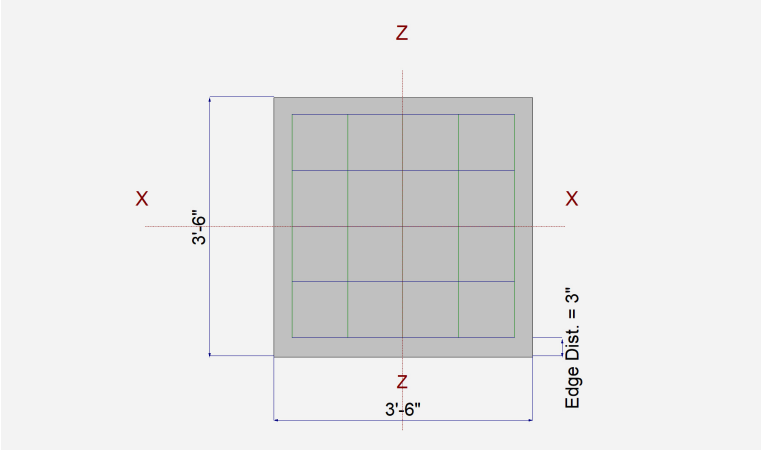

Reinforcing

Bars parallel to X-X Axis			
Number of Bars	=		5
Reinforcing Bar Size	=	#	4
Bars parallel to Z-Z Axis			
Number of Bars	=		5
Reinforcing Bar Size	=	#	4

Bandwidth Distribution Check (ACI 15.4.4.2)

Direction Requiring Closer Separation n/a

Bars required within zone n/a

Bars required on each side of zone n/a

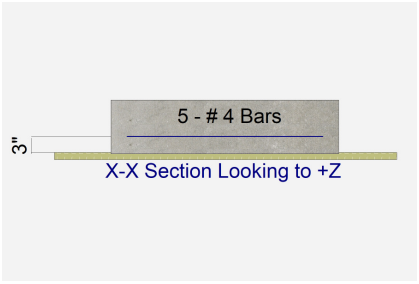

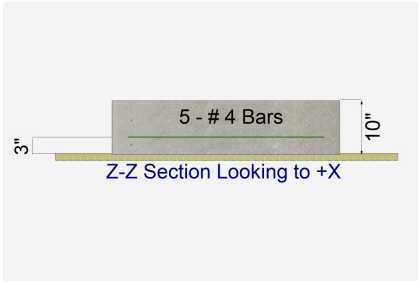

Applied Loads

		D	Lr	L	S	W	E	H	
P : Column Load	=	3.0		9.650	0.0				k
OB : Overburden	=								ksf
M-xx	=								k-ft
M-zz	=								k-ft
V-x	=								k
V-z	=								k

Project Title:
Engineer:
Project ID:
Project Descr:

General Footing

Project File: 23-043.ec6

DESCRIPTION: FTNG#3

DESIGN SUMMARY

Design OK

	Min. Ratio	Item	Applied	Capacity	Governing Load Combination
PASS	0.7687	Soil Bearing	1.153 ksf	1.50 ksf	+D+L about Z-Z axis
PASS	n/a	Overturning - X-X	0.0 k-ft	0.0 k-ft	No Overturning
PASS	n/a	Overturning - Z-Z	0.0 k-ft	0.0 k-ft	No Overturning
PASS	n/a	Sliding - X-X	0.0 k	0.0 k	No Sliding
PASS	n/a	Sliding - Z-Z	0.0 k	0.0 k	No Sliding
PASS	n/a	Uplift	0.0 k	0.0 k	No Uplift
PASS	0.4098	Z Flexure (+X)	2.380 k-ft/ft	5.808 k-ft/ft	+1.20D+1.60L
PASS	0.4098	Z Flexure (-X)	2.380 k-ft/ft	5.808 k-ft/ft	+1.20D+1.60L
PASS	0.4098	X Flexure (+Z)	2.380 k-ft/ft	5.808 k-ft/ft	+1.20D+1.60L
PASS	0.4098	X Flexure (-Z)	2.380 k-ft/ft	5.808 k-ft/ft	+1.20D+1.60L
PASS	0.2850	1-way Shear (+X)	21.371 psi	75.0 psi	+1.20D+1.60L
PASS	0.2850	1-way Shear (-X)	21.371 psi	75.0 psi	+1.20D+1.60L
PASS	0.2850	1-way Shear (+Z)	21.371 psi	75.0 psi	+1.20D+1.60L
PASS	0.2850	1-way Shear (-Z)	21.371 psi	75.0 psi	+1.20D+1.60L
PASS	0.6310	2-way Punching	94.656 psi	150.0 psi	+1.20D+1.60L

Detailed Results

Soil Bearing

Rotation Axis & Load Combination...	Gross Allowable	Xecc (in)	Zecc (in)	Actual Soil Bearing Stress @ Location Bottom, -Z	Top, +Z	Left, -X	Right, +X	Actual / Allow Ratio
X-X, D Only	1.50	n/a	0.0	0.3657	0.3657	n/a	n/a	0.244
X-X, +D+L	1.50	n/a	0.0	1.153	1.153	n/a	n/a	0.769
X-X, +D+0.750L	1.50	n/a	0.0	0.9565	0.9565	n/a	n/a	0.638
X-X, +0.60D	1.50	n/a	0.0	0.2194	0.2194	n/a	n/a	0.146
Z-Z, D Only	1.50	0.0	n/a	n/a	n/a	0.3657	0.3657	0.244
Z-Z, +D+L	1.50	0.0	n/a	n/a	n/a	1.153	1.153	0.769
Z-Z, +D+0.750L	1.50	0.0	n/a	n/a	n/a	0.9565	0.9565	0.638
Z-Z, +0.60D	1.50	0.0	n/a	n/a	n/a	0.2194	0.2194	0.146

Overturning Stability

Rotation Axis & Load Combination...	Overturning Moment	Resisting Moment	Stability Ratio	Status
Footing Has NO Overturning				

Sliding Stability

All units k

Force Application Axis Load Combination...	Sliding Force	Resisting Force	Stability Ratio	Status
Footing Has NO Sliding				

Footing Flexure

Flexure Axis & Load Combination	Mu k-ft	Side	Tension Surface	As Req'd in^2	Gvrn. As in^2	Actual As in^2	Phi*Mn k-ft	Status
X-X, +1.40D	0.5250	+Z	Bottom	0.2160	AsMin	0.2857	5.808	OK
X-X, +1.40D	0.5250	-Z	Bottom	0.2160	AsMin	0.2857	5.808	OK
X-X, +1.20D+1.60L	2.380	+Z	Bottom	0.2160	AsMin	0.2857	5.808	OK
X-X, +1.20D+1.60L	2.380	-Z	Bottom	0.2160	AsMin	0.2857	5.808	OK
X-X, +1.20D+0.50L	1.053	+Z	Bottom	0.2160	AsMin	0.2857	5.808	OK
X-X, +1.20D+0.50L	1.053	-Z	Bottom	0.2160	AsMin	0.2857	5.808	OK
X-X, +1.20D	0.450	+Z	Bottom	0.2160	AsMin	0.2857	5.808	OK
X-X, +1.20D	0.450	-Z	Bottom	0.2160	AsMin	0.2857	5.808	OK
X-X, +0.90D	0.3375	+Z	Bottom	0.2160	AsMin	0.2857	5.808	OK
X-X, +0.90D	0.3375	-Z	Bottom	0.2160	AsMin	0.2857	5.808	OK
Z-Z, +1.40D	0.5250	-X	Bottom	0.2160	AsMin	0.2857	5.808	OK
Z-Z, +1.40D	0.5250	+X	Bottom	0.2160	AsMin	0.2857	5.808	OK
Z-Z, +1.20D+1.60L	2.380	-X	Bottom	0.2160	AsMin	0.2857	5.808	OK
Z-Z, +1.20D+1.60L	2.380	+X	Bottom	0.2160	AsMin	0.2857	5.808	OK
Z-Z, +1.20D+0.50L	1.053	-X	Bottom	0.2160	AsMin	0.2857	5.808	OK
Z-Z, +1.20D+0.50L	1.053	+X	Bottom	0.2160	AsMin	0.2857	5.808	OK
Z-Z, +1.20D	0.450	-X	Bottom	0.2160	AsMin	0.2857	5.808	OK

Project Title:
Engineer:
Project ID:
Project Descr:

General Footing

Project File: 23-043.ec6

LIC# : KW-06016495, Build:20.23.08.30 CK Engineering LLC (c) ENERCALC INC 1983-2023

DESCRIPTION: FTNG#3

Footing Flexure

Flexure Axis & Load Combination	Mu k-ft	Side	Tension Surface	As Req'd in^2	Gvrn. As in^2	Actual As in^2	Phi*Mn k-ft	Status
Z-Z, +1.20D	0.450	+X	Bottom	0.2160	AsMin	0.2857	5.808	OK
Z-Z, +0.90D	0.3375	-X	Bottom	0.2160	AsMin	0.2857	5.808	OK
Z-Z, +0.90D	0.3375	+X	Bottom	0.2160	AsMin	0.2857	5.808	OK

One Way Shear

Load Combination...	Vu @ -X	Vu @ +X	Vu @ -Z	Vu @ +Z	Vu:Max	Phi Vn	Vu / Phi*Vn	Status
+1.40D	4.71 psi	4.71 psi	4.71 psi	4.71 psi	4.71 psi	75.00 psi	0.06	OK
+1.20D+1.60L	21.37 psi	21.37 psi	21.37 psi	21.37 psi	21.37 psi	75.00 psi	0.29	OK
+1.20D+0.50L	9.46 psi	9.46 psi	9.46 psi	9.46 psi	9.46 psi	75.00 psi	0.13	OK
+1.20D	4.04 psi	4.04 psi	4.04 psi	4.04 psi	4.04 psi	75.00 psi	0.05	OK
+0.90D	3.03 psi	3.03 psi	3.03 psi	3.03 psi	3.03 psi	75.00 psi	0.04	OK

Two-Way "Punching" Shear

All units k

Load Combination...	Vu	Phi*Vn	Vu / Phi*Vn	Status
+1.40D	20.88 psi	150.00 psi	0.1392	OK
+1.20D+1.60L	94.66 psi	150.00 psi	0.631	OK
+1.20D+0.50L	41.88 psi	150.00 psi	0.2792	OK
+1.20D	17.90 psi	150.00 psi	0.1193	OK
+0.90D	13.42 psi	150.00 psi	0.08949	OK

Project Title:
Engineer:
Project ID:
Project Descr:

General Footing

Project File: 23-043.ec6

DESCRIPTION: FTNG#4

Code References

Calculations per ACI 318-19, IBC 2021, ASCE 7-16
Load Combinations Used : IBC 2018

General Information

Material Properties

f'c : Concrete 28 day strength	=	2.50	ksi
fy : Rebar Yield	=	40.0	ksi
Ec : Concrete Elastic Modulus	=	3,122.0	ksi
Concrete Density	=	145.0	pcf
φ Values Flexure	=	0.90	
Shear	=	0.750	

Analysis Settings

Min Steel % Bending Reinf.	=	
Min Allow % Temp Reinf.	=	0.00180
Min. Overturning Safety Factor	=	1.0 : 1
Min. Sliding Safety Factor	=	1.0 : 1
Add Ftg Wt for Soil Pressure	:	Yes
Use ftg wt for stability, moments & shears	:	Yes
Add Pedestal Wt for Soil Pressure	:	No
Use Pedestal wt for stability, mom & shear	:	No

Soil Design Values

Allowable Soil Bearing	=	1.50	ksf
Soil Density	=	110.0	pcf
Increase Bearing By Footing Weight	=	No	
Soil Passive Resistance (for Sliding)	=	150.0	pcf
Soil/Concrete Friction Coeff.	=	0.250	

Increases based on footing Depth

Footing base depth below soil surface	=	ft
Allow press. increase per foot of depth	=	ksf
when footing base is below	=	ft

Increases based on footing plan dimension

Allowable pressure increase per foot of depth	=	ksf
when max. length or width is greater than	=	ft

Dimensions

Width parallel to X-X Axis	=	3.50 ft
Length parallel to Z-Z Axis	=	3.50 ft
Footing Thickness	=	10.0 in

Pedestal dimensions...

px : parallel to X-X Axis	=	in
pz : parallel to Z-Z Axis	=	in
Height	=	in

Rebar Centerline to Edge of Concrete...

at Bottom of footing	=	3.0 in

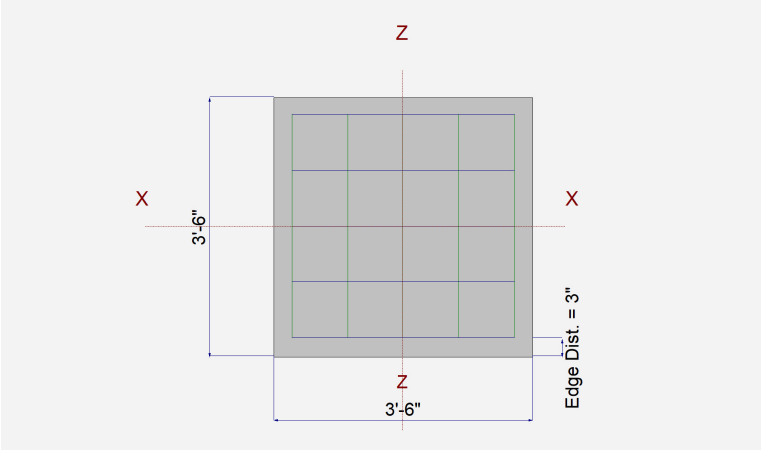

Reinforcing

Bars parallel to X-X Axis			
Number of Bars	=		5.0
Reinforcing Bar Size	=	#	4
Bars parallel to Z-Z Axis			
Number of Bars	=		5.0
Reinforcing Bar Size	=	#	4

Bandwidth Distribution Check (ACI 15.4.4.2)

Direction Requiring Closer Separation	n/a
# Bars required within zone	n/a
# Bars required on each side of zone	n/a

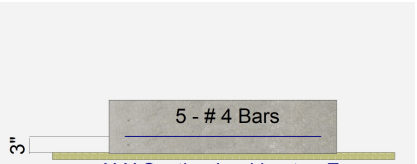

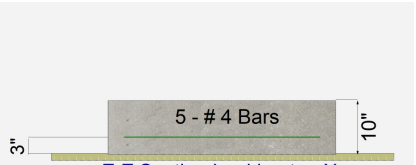

Applied Loads

		D	Lr	L	S	W	E	H	
P : Column Load	=	3.480		12.0					k
OB : Overburden	=								ksf
M-xx	=								k-ft
M-zz	=								k-ft
V-x	=								k
V-z	=								k

Project Title:
Engineer:
Project ID:
Project Descr:

General Footing

Project File: 23-043.ec6

LIC# : KW-06016495, Build:20.23.08.30 CK Engineering LLC (c) ENERCALC INC 1983-2023

DESCRIPTION: FTNG#4

DESIGN SUMMARY

Design OK

	Min. Ratio	Item	Applied	Capacity	Governing Load Combination
PASS	0.9233	Soil Bearing	1.385 ksf	1.50 ksf	+D+L about Z-Z axis
PASS	n/a	Overturning - X-X	0.0 k-ft	0.0 k-ft	No Overturning
PASS	n/a	Overturning - Z-Z	0.0 k-ft	0.0 k-ft	No Overturning
PASS	n/a	Sliding - X-X	0.0 k	0.0 k	No Sliding
PASS	n/a	Sliding - Z-Z	0.0 k	0.0 k	No Sliding
PASS	n/a	Uplift	0.0 k	0.0 k	No Uplift
PASS	0.5031	Z Flexure (+X)	2.922 k-ft/ft	5.808 k-ft/ft	+1.20D+1.60L
PASS	0.5031	Z Flexure (-X)	2.922 k-ft/ft	5.808 k-ft/ft	+1.20D+1.60L
PASS	0.5031	X Flexure (+Z)	2.922 k-ft/ft	5.808 k-ft/ft	+1.20D+1.60L
PASS	0.5031	X Flexure (-Z)	2.922 k-ft/ft	5.808 k-ft/ft	+1.20D+1.60L
PASS	0.3498	1-way Shear (+X)	26.238 psi	75.0 psi	+1.20D+1.60L
PASS	0.3498	1-way Shear (-X)	26.238 psi	75.0 psi	+1.20D+1.60L
PASS	0.3498	1-way Shear (+Z)	26.238 psi	75.0 psi	+1.20D+1.60L
PASS	0.3498	1-way Shear (-Z)	26.238 psi	75.0 psi	+1.20D+1.60L
PASS	0.7747	2-way Punching	116.212 psi	150.0 psi	+1.20D+1.60L

Detailed Results

Soil Bearing

Rotation Axis & Load Combination...	Gross Allowable	Xecc (in)	Zecc (in)	Actual Soil Bearing Stress @ Location Bottom, -Z	Top, +Z	Left, -X	Right, +X	Actual / Allow Ratio
X-X, D Only	1.50	n/a	0.0	0.4049	0.4049	n/a	n/a	0.270
X-X, +D+L	1.50	n/a	0.0	1.385	1.385	n/a	n/a	0.923
X-X, +D+0.750L	1.50	n/a	0.0	1.140	1.140	n/a	n/a	0.760
X-X, +0.60D	1.50	n/a	0.0	0.2429	0.2429	n/a	n/a	0.162
Z-Z, D Only	1.50	0.0	n/a	n/a	n/a	0.4049	0.4049	0.270
Z-Z, +D+L	1.50	0.0	n/a	n/a	n/a	1.385	1.385	0.923
Z-Z, +D+0.750L	1.50	0.0	n/a	n/a	n/a	1.140	1.140	0.760
Z-Z, +0.60D	1.50	0.0	n/a	n/a	n/a	0.2429	0.2429	0.162

Overturning Stability

Rotation Axis & Load Combination...	Overturning Moment	Resisting Moment	Stability Ratio	Status
Footing Has NO Overturning				

All units k

Sliding Stability

Force Application Axis Load Combination...	Sliding Force	Resisting Force	Stability Ratio	Status
Footing Has NO Sliding				

Footing Flexure

Flexure Axis & Load Combination	Mu k-ft	Side	Tension Surface	As Req'd in^2	Gvrn. As in^2	Actual As in^2	Phi*Mn k-ft	Status
X-X, +1.40D	0.6090	+Z	Bottom	0.2160	AsMin	0.2857	5.808	OK
X-X, +1.40D	0.6090	-Z	Bottom	0.2160	AsMin	0.2857	5.808	OK
X-X, +1.20D+1.60L	2.922	+Z	Bottom	0.2160	AsMin	0.2857	5.808	OK
X-X, +1.20D+1.60L	2.922	-Z	Bottom	0.2160	AsMin	0.2857	5.808	OK
X-X, +1.20D+0.50L	1.272	+Z	Bottom	0.2160	AsMin	0.2857	5.808	OK
X-X, +1.20D+0.50L	1.272	-Z	Bottom	0.2160	AsMin	0.2857	5.808	OK
X-X, +1.20D	0.5220	+Z	Bottom	0.2160	AsMin	0.2857	5.808	OK
X-X, +1.20D	0.5220	-Z	Bottom	0.2160	AsMin	0.2857	5.808	OK
X-X, +0.90D	0.3915	+Z	Bottom	0.2160	AsMin	0.2857	5.808	OK
X-X, +0.90D	0.3915	-Z	Bottom	0.2160	AsMin	0.2857	5.808	OK
Z-Z, +1.40D	0.6090	-X	Bottom	0.2160	AsMin	0.2857	5.808	OK
Z-Z, +1.40D	0.6090	+X	Bottom	0.2160	AsMin	0.2857	5.808	OK
Z-Z, +1.20D+1.60L	2.922	-X	Bottom	0.2160	AsMin	0.2857	5.808	OK
Z-Z, +1.20D+1.60L	2.922	+X	Bottom	0.2160	AsMin	0.2857	5.808	OK
Z-Z, +1.20D+0.50L	1.272	-X	Bottom	0.2160	AsMin	0.2857	5.808	OK
Z-Z, +1.20D+0.50L	1.272	+X	Bottom	0.2160	AsMin	0.2857	5.808	OK
Z-Z, +1.20D	0.5220	-X	Bottom	0.2160	AsMin	0.2857	5.808	OK

Project Title:
Engineer:
Project ID:
Project Descr:

General Footing

Project File: 23-043.ec6

LIC# : KW-06016495, Build:20.23.08.30 CK Engineering LLC (c) ENERCALC INC 1983-2023

DESCRIPTION: FTNG#4

Footing Flexure

Flexure Axis & Load Combination	Mu k-ft	Side	Tension Surface	As Req'd in^2	Gvrn. As in^2	Actual As in^2	Phi*Mn k-ft	Status
Z-Z, +1.20D	0.5220	+X	Bottom	0.2160	AsMin	0.2857	5.808	OK
Z-Z, +0.90D	0.3915	-X	Bottom	0.2160	AsMin	0.2857	5.808	OK
Z-Z, +0.90D	0.3915	+X	Bottom	0.2160	AsMin	0.2857	5.808	OK

One Way Shear

Load Combination...	Vu @ -X	Vu @ +X	Vu @ -Z	Vu @ +Z	Vu:Max	Phi Vn	Vu / Phi*Vn	Status
+1.40D	5.47 psi	5.47 psi	5.47 psi	5.47 psi	5.47 psi	75.00 psi	0.07	OK
+1.20D+1.60L	26.24 psi	26.24 psi	26.24 psi	26.24 psi	26.24 psi	75.00 psi	0.35	OK
+1.20D+0.50L	11.42 psi	11.42 psi	11.42 psi	11.42 psi	11.42 psi	75.00 psi	0.15	OK
+1.20D	4.69 psi	4.69 psi	4.69 psi	4.69 psi	4.69 psi	75.00 psi	0.06	OK
+0.90D	3.52 psi	3.52 psi	3.52 psi	3.52 psi	3.52 psi	75.00 psi	0.05	OK

Two-Way "Punching" Shear

All units k

Load Combination...	Vu	Phi*Vn	Vu / Phi*Vn	Status
+1.40D	24.22 psi	150.00 psi	0.1615	OK
+1.20D+1.60L	116.21 psi	150.00 psi	0.7747	OK
+1.20D+0.50L	50.59 psi	150.00 psi	0.3373	OK
+1.20D	20.76 psi	150.00 psi	0.1384	OK
+0.90D	15.57 psi	150.00 psi	0.1038	OK

Project Title:
Engineer:
Project ID:
Project Descr:

Cantilevered Retaining Wall

Project File: 23-043.ec6

LIC# : KW-06016495, Build:20.23.08.30 CK Engineering LLC (c) ENERCALC INC 1983-2023

DESCRIPTION: 4ft wall

Code Reference

Calculations per IBC 2021 1807.3, ASCE 7-16

Criteria

Retained Height	=	4.00 ft
Wall height above soil	=	0.50 ft
Slope Behind Wall	=	0.00
Height of Soil over Toe	=	0.00 in
Water table above bottom of footing	=	0.0 ft

Soil Data

Allow Soil Bearing	=	1,500.0 psf
Equivalent Fluid Pressure Method		
Active Heel Pressure	=	35.0 psf/ft
	=	
Passive Pressure	=	150.0 psf/ft
Soil Density, Heel	=	110.00 pcf
Soil Density, Toe	=	110.00 pcf
Footing||Soil Friction	=	0.400
Soil height to ignore for passive pressure	=	12.00 in

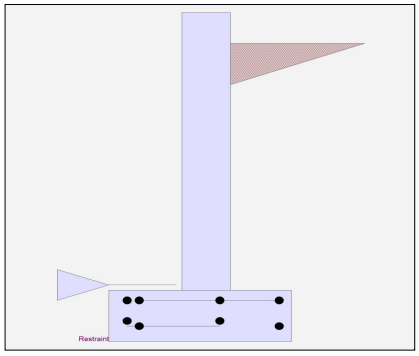

Surcharge Loads

Surcharge Over Heel	=	0.0 psf
Used To Resist Sliding & Overturning		
Surcharge Over Toe	=	0.0
Used for Sliding & Overturning		

Lateral Load Applied to Stem

Lateral Load	=	0.0 #/ft
...Height to Top	=	0.00 ft
...Height to Bottom	=	0.00 ft
Load Type	=	Wind (W) (Service Level)
Wind on Exposed Stem (Strength Level)	=	0.0 psf

Adjacent Footing Load

Adjacent Footing Load	=	0.0 lbs
Footing Width	=	0.00 ft
Eccentricity	=	0.00 in
Wall to Ftg CL Dist	=	0.00 ft
Footing Type		Spread Footing
Base Above/Below Soil at Back of Wall	=	0.0 ft
Poisson's Ratio	=	0.300

Axial Load Applied to Stem

Axial Dead Load	=	0.0 lbs
Axial Live Load	=	0.0 lbs
Axial Load Eccentricity	=	0.0 in

Earth Pressure Seismic Load

Method : Uniform		
Multiplier Used	=	10.000
(Multiplier used on soil density)		
Uniform Seismic Force	=	48.333
Total Seismic Force	=	233.611

Project Title:
Engineer:
Project ID:
Project Descr:

Cantilevered Retaining Wall

Project File: 23-043.ec6

LIC# : KW-06016495, Build:20.23.08.30 CK Engineering LLC (c) ENERCALC INC 1983-2023

DESCRIPTION: 4ft wall

Design Summary

Wall Stability Ratios

Overturning	=	1.66	OK
Slab Resists All Sliding !			
Global Stability	=	1.97	
Total Bearing Load	=	1,129 lbs	
...resultant ecc.	=	7.55 in	
Eccentricity outside middle third			
Soil Pressure @ Toe	=	1,213 psf	OK
Soil Pressure @ Heel	=	0 psf	OK
Allowable	=	1,500 psf	
Soil Pressure Less Than Allowable			
ACI Factored @ Toe	=	1,698 psf	
ACI Factored @ Heel	=	0 psf	
Footing Shear @ Toe	=	7.9 psi	OK
Footing Shear @ Heel	=	6.1 psi	OK
Allowable	=	75.0 psi	

Sliding Calcs

Lateral Sliding Force	=	572.3 lbs

Vertical component of active lateral soil pressure IS NOT considered in the calculation of soil bearing

Load Factors

Building Code	
Dead Load	1.200
Live Load	1.600
Earth, H	1.600
Wind, W	1.600
Seismic, E	1.000

Stem Construction

		Bottom		
		Stem OK		
Design Height Above Ftg	ft =	0.00		
Wall Material Above "Ht"	=	Concrete		
Design Method	=	SD	SD	SD
Thickness	=	8.00		
Rebar Size	=	# 4		
Rebar Spacing	=	12.00		
Rebar Placed at	=	Edge		
Design Data				
fb/FB + fa/Fa	=	**0.269**		
Total Force @ Section				
Service Level	lbs =			
Strength Level	lbs =	641.3		
Moment....Actual				
Service Level	ft-# =			
Strength Level	ft-# =	984.0		
Moment.....Allowable	=	3,655.6		
Shear.....Actual				
Service Level	psi =			
Strength Level	psi =	8.6		
Shear.....Allowable	psi =	41.6		
Anet (Masonry)	in2 =			
Wall Weight	psf =	100.0		
Rebar Depth 'd'	in =	6.25		

Masonry Data

f'm	psi =	
Fs	psi =	
Solid Grouting	=	
Modular Ratio 'n'	=	
Equiv. Solid Thick.	=	
Masonry Block Type	=	
Masonry Design Method	=	ASD

Concrete Data

f'c	psi =	2,500.0
Fy	psi =	40,000.0

Project Title:
Engineer:
Project ID:
Project Descr:

Cantilevered Retaining Wall

Project File: 23-043.ec6

LIC# : KW-06016495, Build:20.23.08.30 CK Engineering LLC (c) ENERCALC INC 1983-2023

DESCRIPTION: 4ft wall

Concrete Stem Rebar Area Details

Bottom Stem	Vertical Reinforcing	Horizontal Reinforcing	
As (based on applied moment) :	0.0553 in2/ft		
0.0018bh : 0.0018(12)(8) :	0.1728 in2/ft	Horizontal Reinforcing Options :	
	==========	One layer of :	Two layers of :
Required Area :	0.1728 in2/ft	#4@ 13.89 in	#4@ 27.78 in
Provided Area :	0.2 in2/ft	#5@ 21.53 in	#5@ 43.06 in
Maximum Area :	1.27 in2/ft	#6@ 30.56 in	#6@ 61.11 in

Footing Data

Toe Width	=	1.00 ft
Heel Width	=	1.50
Total Footing Width	=	2.50
Footing Thickness	=	10.00 in
Key Width	=	0.00 in
Key Depth	=	0.00 in
Key Distance from Toe	=	0.00 ft

f'c = 2,500 psi Fy = 40,000 psi
Footing Concrete Density = 150.00 pcf
Min. As % = 0.0018
Cover @ Top 2.00 @ Btm.= 3.00 in

Footing Design Results

		Toe	Heel	
Factored Pressure	=	1,698	0	psf
Mu' : Upward	=	697	1	ft-#
Mu' : Downward	=	75	235	ft-#
Mu: Design	=	622 OK	234 ft-#	OK
phiMn	=	4,264	4,912	ft-#
Actual 1-Way Shear	=	7.87	6.09	psi
Allow 1-Way Shear	=	75.00	75.00	psi

Toe Reinforcing = # 4 @ 11.11 in
Heel Reinforcing = # 4 @ 11.11 in
Key Reinforcing = None Spec'd
Footing Torsion, Tu = 0.00 ft-lbs
Footing Allow. Torsion, phi Tu = 0.00 ft-lbs

If torsion exceeds allowable, provide supplemental design for footing torsion.

Other Acceptable Sizes & Spacings

Toe: #4@ 11.11 in, #5@ 17.22 in, #6@ 24.44 in, #7@ 33.33 in, #8@ 43.88 in, #9@ 55.55 in, #10@ 70.55 in

Heel: #4@ 11.11 in, #5@ 17.22 in, #6@ 24.44 in, #7@ 33.33 in, #8@ 43.88 in, #9@ 55.55 in, #10@ 70.55 in

Key: No key defined

Min footing T&S reinf Area 0.54 in2
Min footing T&S reinf Area per foot 0.22 in2 /ft

If one layer of horizontal bars:	If two layers of horizontal bars:
#4@ 11.11 in	#4@ 22.22 in
#5@ 17.22 in	#5@ 34.44 in
#6@ 24.44 in	#6@ 48.89 in

Project Title:
Engineer:
Project ID:
Project Descr:

Cantilevered Retaining Wall

Project File: 23-043.ec6

DESCRIPTION: 4ft wall

Summary of Overturning & Resisting Forces & Moments

Item		.....OVERTURNING..... Force lbs	Distance ft	Moment ft-#		.....RESISTING..... Force lbs	Distance ft	Moment ft-#
HL Act Pres (ab water tbl)		408.8	1.61	658.7	Soil Over HL (ab. water tbl)	366.7	2.08	763.9
HL Act Pres (be water tbl)					Soil Over HL (bel. water tbl)		2.08	763.9
Hydrostatic Force					Water Table			
Buoyant Force	=				Sloped Soil Over Heel	=		
Surcharge over Heel	=				Surcharge Over Heel	=		
Surcharge Over Toe	=				Adjacent Footing Load	=		
Adjacent Footing Load	=				Axial Dead Load on Stem	=		
Added Lateral Load	=				* Axial Live Load on Stem	=		
Load @ Stem Above Soil	=				Soil Over Toe	=		
Seismic Earth Load	=	163.5	2.42	395.2	Surcharge Over Toe	=		
	=				Stem Weight(s)	=	450.0	1.33	600.0
					Earth @ Stem Transitions	=			
Total	=	572.3	**O.T.M.** =	1,053.8	Footing Weight	=	312.5	1.25	390.6
					Key Weight	=			
					Vert. Component	=			
					Total =		1,129.2 lbs	**R.M.=**	1,754.5

Resisting/Overturning Ratio = **1.66**

Vertical Loads used for Soil Pressure = 1,129.2 lbs

* Axial live load NOT included in total displayed, or used for overturning resistance, but is included for soil pressure calculation.

If seismic is included, the OTM and sliding ratios may be 1.1 per section 1807.2.3 of IBC.

Vertical component of active lateral soil pressure IS NOT considered in the calculation of Sliding Resistance.

Vertical component of active lateral soil pressure IS NOT considered in the calculation of Overturning Resistance.

Tilt

Horizontal Deflection at Top of Wall due to settlement of soil

(Deflection due to wall bending not considered)

Soil Spring Reaction Modulus	250.0	pci
Horizontal Defl @ Top of Wall (approximate only)	0.061	in

The above calculation is not valid if the heel soil bearing pressure exceeds that of the toe, because the wall would then tend to rotate into the retained soil.

DESCRIPTION: 4ft wall

Rebar Lap & Embedment Lengths Information

Stem Design Segment: Bottom
Stem Design Height: 0.00 ft above top of footing

Lap Splice length for #4 bar specified in this stem design segment (25.4.2.4a) =	15.60 in
Development length for #4 bar specified in this stem design segment =	12.00 in
Hooked embedment length into footing for #4 bar specified in this stem design segment =	0.00 in
As Provided =	0.2000 in2/ft
As Required =	0.1728 in2/ft

Project Title:
Engineer:
Project ID:
Project Descr:

Cantilevered Retaining Wall

Project File: 23-043.ec6

LIC# : KW-06016495, Build:20.23.08.30 CK Engineering LLC (c) ENERCALC INC 1983-2023

DESCRIPTION: 4ft wall

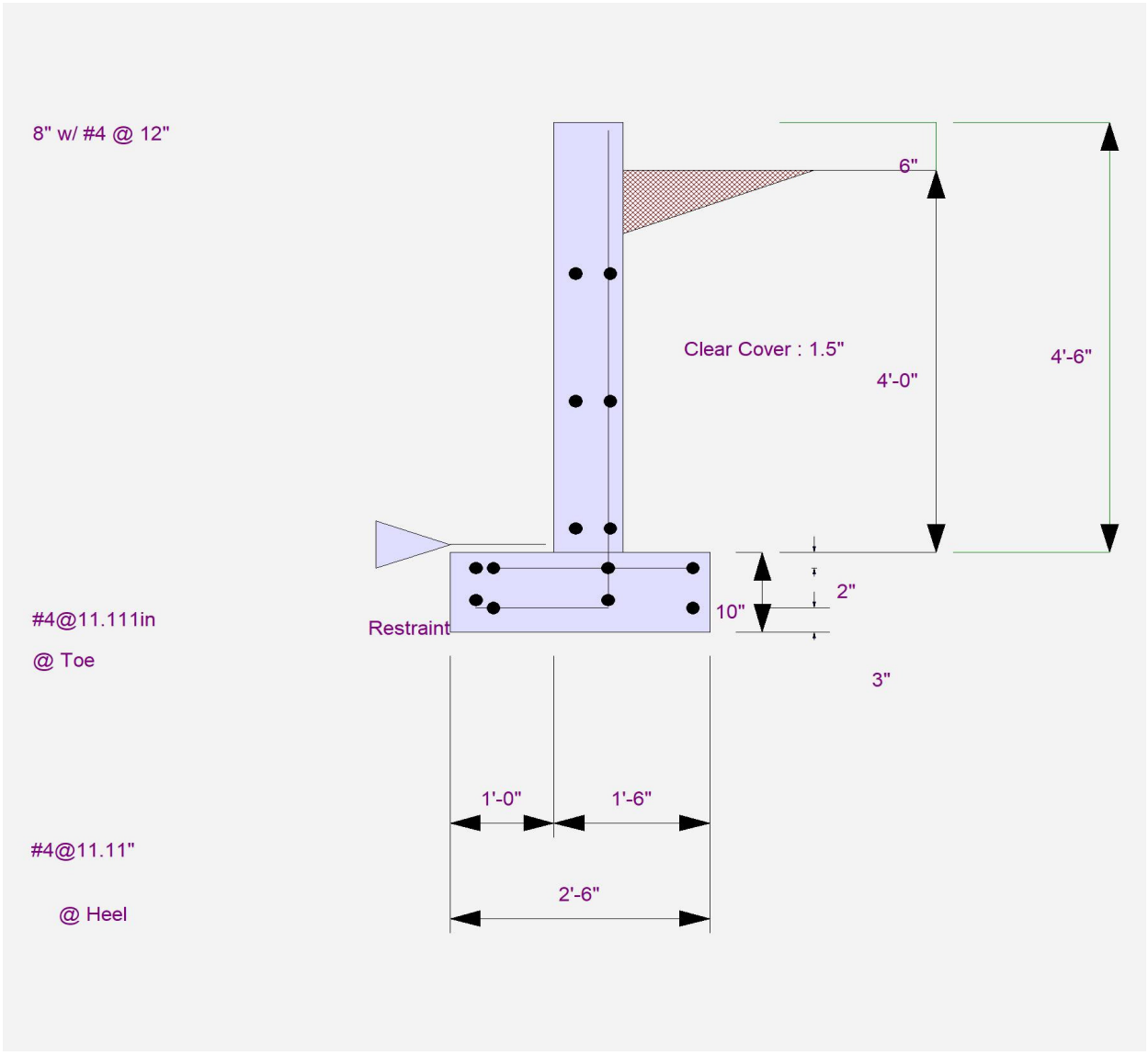

Project Title:
Engineer:
Project ID:
Project Descr:

Cantilevered Retaining Wall

Project File: 23-043.ec6

LIC# : KW-06016495, Build:20.23.08.30 CK Engineering LLC (c) ENERCALC INC 1983-2023

DESCRIPTION: 4ft wall

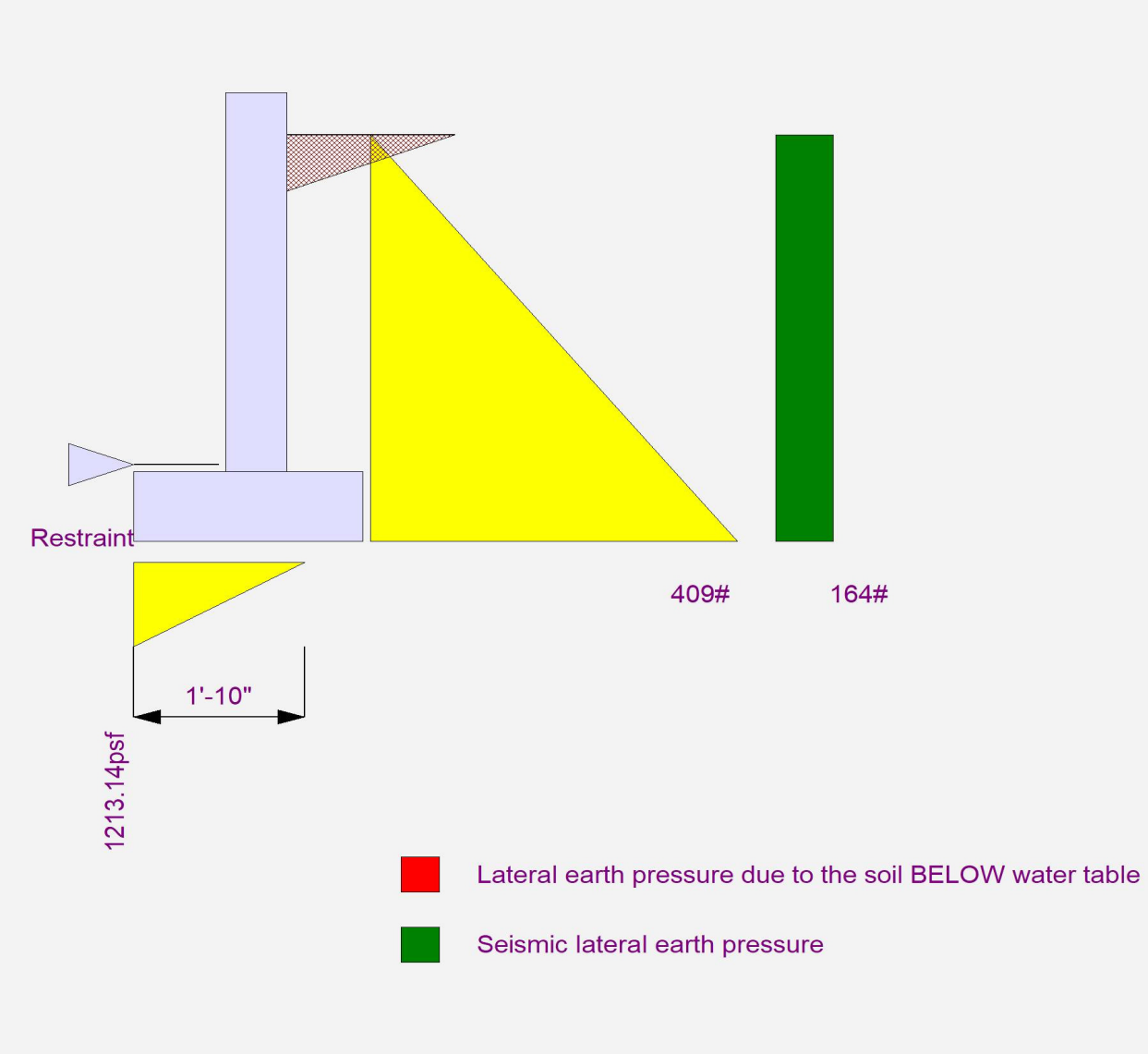

Project Title:
Engineer:
Project ID:
Project Descr:

Cantilevered Retaining Wall

Project File: 23-043.ec6

LIC# : KW-06016495, Build:20.23.08.30 CK Engineering LLC (c) ENERCALC INC 1983-2023

DESCRIPTION: 6ft wall

Code Reference

Calculations per IBC 2021 1807.3, ASCE 7-16

Criteria

Retained Height	=	6.00 ft
Wall height above soil	=	0.50 ft
Slope Behind Wall	=	0.00
Height of Soil over Toe	=	0.00 in
Water table above bottom of footing	=	0.0 ft

Soil Data

Allow Soil Bearing	=	1,500.0 psf
Equivalent Fluid Pressure Method		
Active Heel Pressure	=	35.0 psf/ft
	=	
Passive Pressure	=	150.0 psf/ft
Soil Density, Heel	=	110.00 pcf
Soil Density, Toe	=	110.00 pcf
Footing||Soil Friction	=	0.400
Soil height to ignore for passive pressure	=	12.00 in

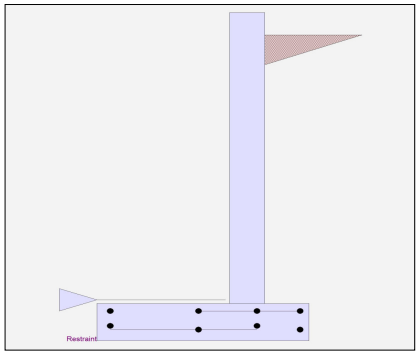

Surcharge Loads

Surcharge Over Heel	=	0.0 psf
Used To Resist Sliding & Overturning		
Surcharge Over Toe	=	0.0
Used for Sliding & Overturning		

Lateral Load Applied to Stem

Lateral Load	=	0.0 #/ft
...Height to Top	=	0.00 ft
...Height to Bottom	=	0.00 ft
Load Type	=	Wind (W) (Service Level)
Wind on Exposed Stem (Strength Level)	=	0.0 psf

Adjacent Footing Load

Adjacent Footing Load	=	0.0 lbs
Footing Width	=	0.00 ft
Eccentricity	=	0.00 in
Wall to Ftg CL Dist	=	0.00 ft
Footing Type		Spread Footing
Base Above/Below Soil at Back of Wall	=	0.0 ft
Poisson's Ratio	=	0.300

Axial Load Applied to Stem

Axial Dead Load	=	0.0 lbs
Axial Live Load	=	0.0 lbs
Axial Load Eccentricity	=	0.0 in

Earth Pressure Seismic Load

Method : Uniform		
Multiplier Used	=	10.000
(Multiplier used on soil density)		
Uniform Seismic Force	=	68.333
Total Seismic Force	=	466.944

Project Title:
Engineer:
Project ID:
Project Descr:

Cantilevered Retaining Wall

Project File: 23-043.ec6

LIC# : KW-06016495, Build:20.23.08.30 CK Engineering LLC (c) ENERCALC INC 1983-2023

DESCRIPTION: 6ft wall

Design Summary

Wall Stability Ratios

Overturning	=	1.62	OK
Slab Resists All Sliding !			
Global Stability	=	1.50	
Total Bearing Load	=	1,700 lbs	
...resultant ecc.	=	11.05 in	
Eccentricity outside middle third			
Soil Pressure @ Toe	=	1,050 psf	OK
Soil Pressure @ Heel	=	0 psf	OK
Allowable	=	1,500 psf	
Soil Pressure Less Than Allowable			
ACI Factored @ Toe	=	1,470 psf	
ACI Factored @ Heel	=	0 psf	
Footing Shear @ Toe	=	22.0 psi	OK
Footing Shear @ Heel	=	8.7 psi	OK
Allowable	=	75.0 psi	

Sliding Calcs

Lateral Sliding Force	=	1,144.0 lbs	

Vertical component of active lateral soil pressure IS NOT considered in the calculation of soil bearing

Load Factors

Building Code	
Dead Load	1.200
Live Load	1.600
Earth, H	1.600
Wind, W	1.600
Seismic, E	1.000

Stem Construction

		Bottom		
		Stem OK		
Design Height Above Ftg	ft =	0.00		
Wall Material Above "Ht"	=	Concrete		
Design Method	=	SD	SD	SD
Thickness	=	8.00		
Rebar Size	=	# 4		
Rebar Spacing	=	8.00		
Rebar Placed at	=	Edge		
Design Data				
fb/FB + fa/Fa	=	**0.599**		
Total Force @ Section				
Service Level	lbs =			
Strength Level	lbs =	1,418.0		
Moment....Actual				
Service Level	ft-# =			
Strength Level	ft-# =	3,246.0		
Moment.....Allowable	=	5,412.6		
Shear.....Actual				
Service Level	psi =			
Strength Level	psi =	18.9		
Shear.....Allowable	psi =	47.6		
Anet (Masonry)	in2 =			
Wall Weight	psf =	100.0		
Rebar Depth 'd'	in =	6.25		

Masonry Data

f'm	psi =	
Fs	psi =	
Solid Grouting	=	
Modular Ratio 'n'	=	
Equiv. Solid Thick.	=	
Masonry Block Type	=	
Masonry Design Method	=	ASD

Concrete Data

f'c	psi =	2,500.0
Fy	psi =	40,000.0

Project Title:
Engineer:
Project ID:
Project Descr:

Cantilevered Retaining Wall

Project File: 23-043.ec6

LIC# : KW-06016495, Build:20.23.08.30 CK Engineering LLC (c) ENERCALC INC 1983-2023

DESCRIPTION: 6ft wall

Concrete Stem Rebar Area Details

Bottom Stem	Vertical Reinforcing	Horizontal Reinforcing	
As (based on applied moment) :	0.1824 in2/ft		
0.0018bh : 0.0018(12)(8) :	0.1728 in2/ft	Horizontal Reinforcing Options :	
	==========	One layer of :	Two layers of :
Required Area :	0.1824 in2/ft	#4@ 13.89 in	#4@ 27.78 in
Provided Area :	0.3 in2/ft	#5@ 21.53 in	#5@ 43.06 in
Maximum Area :	1.27 in2/ft	#6@ 30.56 in	#6@ 61.11 in

Footing Data

Toe Width	=	2.50 ft
Heel Width	=	1.50
Total Footing Width	=	4.00
Footing Thickness	=	10.00 in
Key Width	=	0.00 in
Key Depth	=	0.00 in
Key Distance from Toe	=	0.00 ft

f'c = 2,500 psi Fy = 40,000 psi
Footing Concrete Density = 150.00 pcf
Min. As % = 0.0018
Cover @ Top 2.00 @ Btm.= 3.00 in

Footing Design Results

		Toe		Heel	
Factored Pressure	=	1,470		0	psf
Mu' : Upward	=	3,412		0	ft-#
Mu' : Downward	=	469		327	ft-#
Mu: Design	=	2,943	OK	327	ft-# OK
phiMn	=	4,264		4,912	ft-#
Actual 1-Way Shear	=	21.98		8.71	psi
Allow 1-Way Shear	=	75.00		75.00	psi

Toe Reinforcing = # 4 @ 11.11 in
Heel Reinforcing = # 4 @ 11.11 in
Key Reinforcing = None Spec'd
Footing Torsion, Tu = 0.00 ft-lbs
Footing Allow. Torsion, phi Tu = 0.00 ft-lbs

If torsion exceeds allowable, provide supplemental design for footing torsion.

Other Acceptable Sizes & Spacings

Toe: #4@ 11.11 in, #5@ 17.22 in, #6@ 24.44 in, #7@ 33.33 in, #8@ 43.88 in, #9@ 55.55 in, #10@ 70.55 in

Heel: #4@ 11.11 in, #5@ 17.22 in, #6@ 24.44 in, #7@ 33.33 in, #8@ 43.88 in, #9@ 55.55 in, #10@ 70.55 in

Key: No key defined

Min footing T&S reinf Area 0.86 in2
Min footing T&S reinf Area per foot 0.22 in2 /ft

If one layer of horizontal bars:	If two layers of horizontal bars:
#4@ 11.11 in	#4@ 22.22 in
#5@ 17.22 in	#5@ 34.44 in
#6@ 24.44 in	#6@ 48.89 in

Project Title:
Engineer:
Project ID:
Project Descr:

Cantilevered Retaining Wall

Project File: 23-043.ec6

LIC# : KW-06016495, Build:20.23.08.30 CK Engineering LLC (c) ENERCALC INC 1983-2023

DESCRIPTION: 6ft wall

Summary of Overturning & Resisting Forces & Moments

Item		.....OVERTURNING..... Force lbs	Distance ft	Moment ft-#		.....RESISTING..... Force lbs	Distance ft	Moment ft-#
HL Act Pres (ab water tbl)		817.2	2.28	1,861.3	Soil Over HL (ab. water tbl)	550.0	3.58	1,970.8
HL Act Pres (be water tbl)					Soil Over HL (bel. water tbl)		3.58	1,970.8
Hydrostatic Force					Water Table			
Buoyant Force	=				Sloped Soil Over Heel	=		
Surcharge over Heel	=				Surcharge Over Heel	=		
Surcharge Over Toe	=				Adjacent Footing Load	=		
Adjacent Footing Load	=				Axial Dead Load on Stem	=		
Added Lateral Load	=				* Axial Live Load on Stem	=		
Load @ Stem Above Soil	=				Soil Over Toe	=		
Seismic Earth Load	=	326.9	3.42	1,116.8	Surcharge Over Toe	=		
	=				Stem Weight(s)	=	650.0	2.83	1,841.7
					Earth @ Stem Transitions	=			
Total	=	1,144.0	**O.T.M.** =	2,978.1	Footing Weight	=	500.0	2.00	1,000.0
					Key Weight	=			
					Vert. Component	=			
					Total =		1,700.0 lbs	**R.M.=**	4,812.5

Resisting/Overturning Ratio = **1.62**

Vertical Loads used for Soil Pressure = 1,700.0 lbs

* Axial live load NOT included in total displayed, or used for overturning resistance, but is included for soil pressure calculation.

If seismic is included, the OTM and sliding ratios may be 1.1 per section 1807.2.3 of IBC.

Vertical component of active lateral soil pressure IS NOT considered in the calculation of Sliding Resistance.

Vertical component of active lateral soil pressure IS NOT considered in the calculation of Overturning Resistance.

Tilt

Horizontal Deflection at Top of Wall due to settlement of soil

(Deflection due to wall bending not considered)

Soil Spring Reaction Modulus	250.0	pci
Horizontal Defl @ Top of Wall (approximate only)	0.047	in

The above calculation is not valid if the heel soil bearing pressure exceeds that of the toe, because the wall would then tend to rotate into the retained soil.

DESCRIPTION: 6ft wall

Rebar Lap & Embedment Lengths Information

Stem Design Segment: Bottom
Stem Design Height: 0.00 ft above top of footing

Lap Splice length for #4 bar specified in this stem design segment (25.4.2.4a) =	15.60 in
Development length for #4 bar specified in this stem design segment =	12.00 in
Hooked embedment length into footing for #4 bar specified in this stem design segment =	0.00 in
As Provided =	0.3000 in2/ft
As Required =	0.2432 in2/ft

Project Title:
Engineer:
Project ID:
Project Descr:

Cantilevered Retaining Wall

Project File: 23-043.ec6

LIC# : KW-06016495, Build:20.23.08.30 CK Engineering LLC (c) ENERCALC INC 1983-2023

DESCRIPTION: 6ft wall

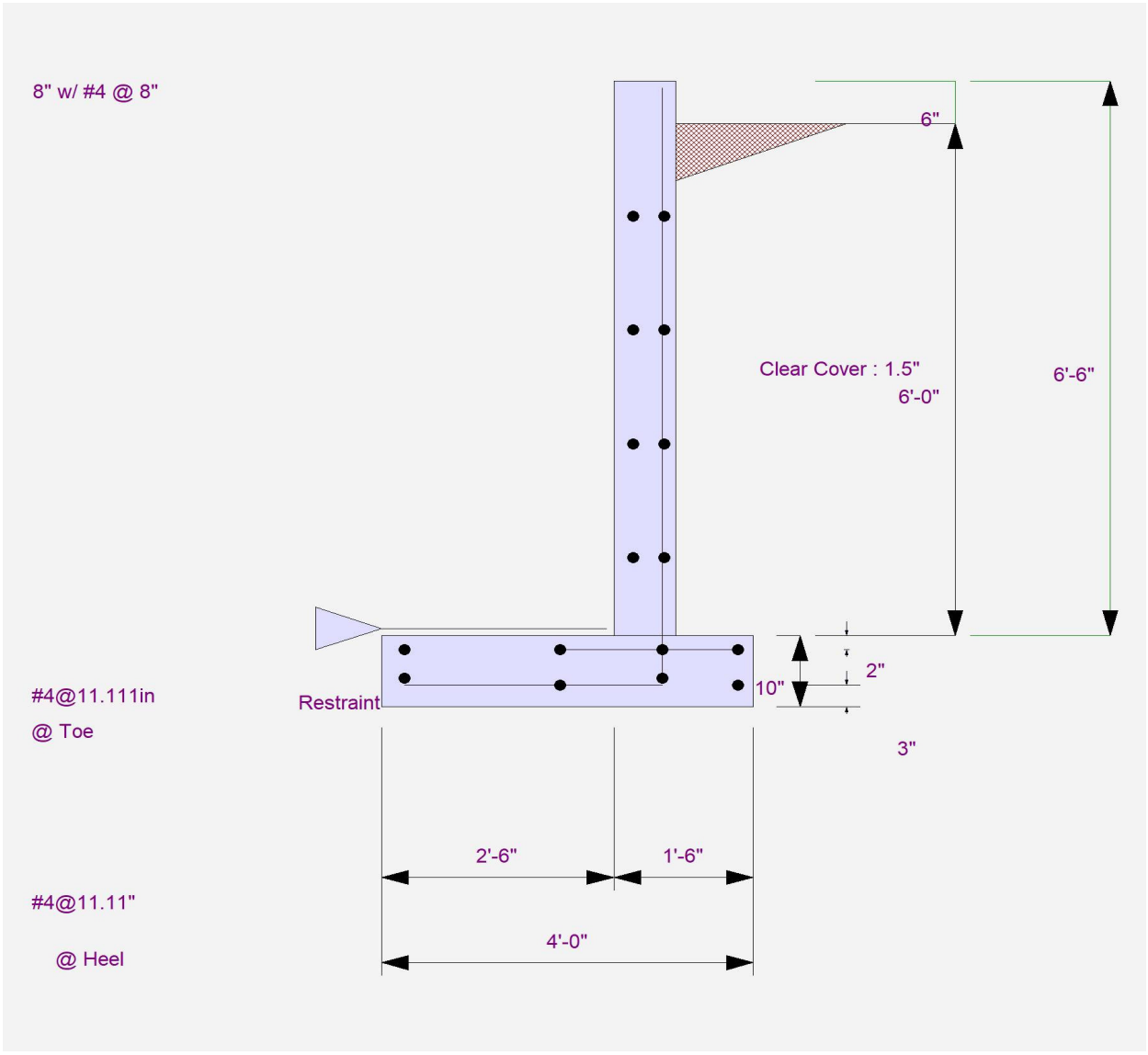

Project Title:
Engineer:
Project ID:
Project Descr:

Cantilevered Retaining Wall

Project File: 23-043.ec6

LIC# : KW-06016495, Build:20.23.08.30 CK Engineering LLC (c) ENERCALC INC 1983-2023

DESCRIPTION: 6ft wall

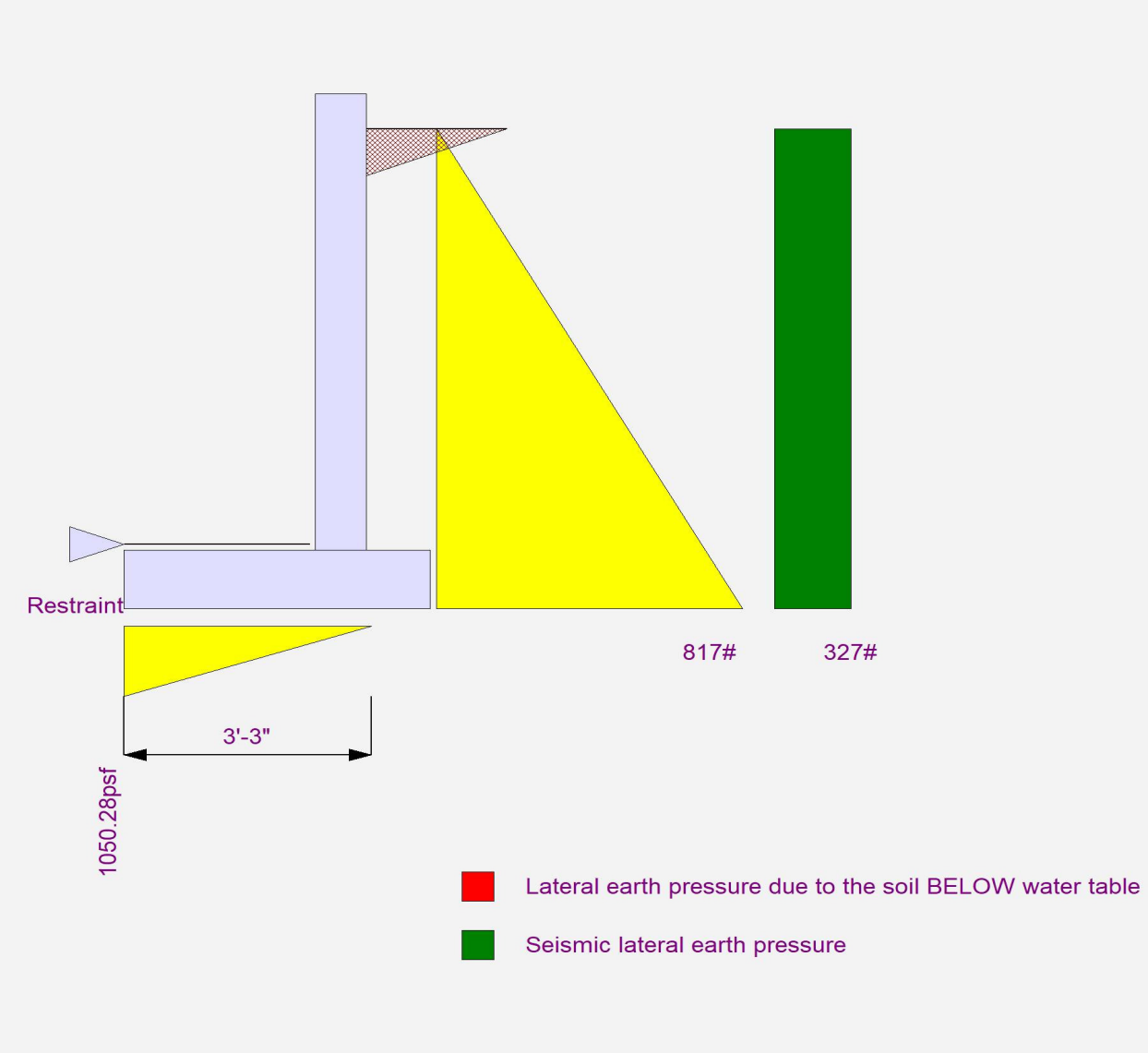

Project Title:
Engineer:
Project ID:
Project Descr:

Cantilevered Retaining Wall

Project File: 23-043.ec6

LIC# : KW-06016495, Build:20.23.08.30 CK Engineering LLC (c) ENERCALC INC 1983-2023

DESCRIPTION: 8ft wall

Code Reference

Calculations per IBC 2021 1807.3, ASCE 7-16

Criteria

Retained Height	=	8.00 ft
Wall height above soil	=	0.50 ft
Slope Behind Wall	=	0.00
Height of Soil over Toe	=	0.00 in
Water table above bottom of footing	=	0.0 ft

Soil Data

Allow Soil Bearing	=	1,500.0 psf
Equivalent Fluid Pressure Method		
Active Heel Pressure	=	35.0 psf/ft
	=	
Passive Pressure	=	150.0 psf/ft
Soil Density, Heel	=	110.00 pcf
Soil Density, Toe	=	110.00 pcf
Footing||Soil Friction	=	0.400
Soil height to ignore for passive pressure	=	12.00 in

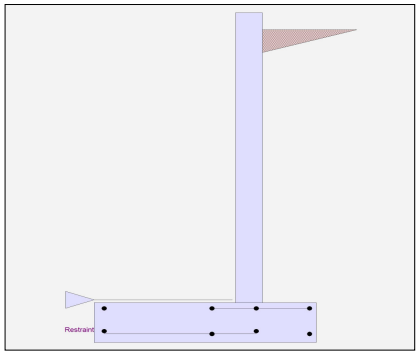

Surcharge Loads

Surcharge Over Heel	=	0.0 psf
Used To Resist Sliding & Overturning		
Surcharge Over Toe	=	0.0
Used for Sliding & Overturning		

Lateral Load Applied to Stem

Lateral Load	=	0.0 #/ft
...Height to Top	=	0.00 ft
...Height to Bottom	=	0.00 ft
Load Type	=	Wind (W) (Service Level)
Wind on Exposed Stem (Strength Level)	=	0.0 psf

Adjacent Footing Load

Adjacent Footing Load	=	0.0 lbs
Footing Width	=	0.00 ft
Eccentricity	=	0.00 in
Wall to Ftg CL Dist	=	0.00 ft
Footing Type		Spread Footing
Base Above/Below Soil at Back of Wall	=	0.0 ft
Poisson's Ratio	=	0.300

Axial Load Applied to Stem

Axial Dead Load	=	0.0 lbs
Axial Live Load	=	0.0 lbs
Axial Load Eccentricity	=	0.0 in

Earth Pressure Seismic Load

Method : Uniform		
Multiplier Used	=	10.000
(Multiplier used on soil density)		
Uniform Seismic Force	=	91.667
Total Seismic Force	=	840.278

Project Title:
Engineer:
Project ID:
Project Descr:

Cantilevered Retaining Wall

Project File: 23-043.ec6

LIC# : KW-06016495, Build:20.23.08.30 CK Engineering LLC (c) ENERCALC INC 1983-2023

DESCRIPTION: 8ft wall

Design Summary

Wall Stability Ratios

Overturning	=	1.61	OK
Slab Resists All Sliding !			
Global Stability	=	1.51	
Total Bearing Load	=	2,986 lbs	
...resultant ecc.	=	15.37 in	
Eccentricity outside middle third			
Soil Pressure @ Toe	=	1,355 psf	OK
Soil Pressure @ Heel	=	0 psf	OK
Allowable	=	1,500 psf	
Soil Pressure Less Than Allowable			
ACI Factored @ Toe	=	1,897 psf	
ACI Factored @ Heel	=	0 psf	
Footing Shear @ Toe	=	23.4 psi	OK
Footing Shear @ Heel	=	12.1 psi	OK
Allowable	=	75.0 psi	

Sliding Calcs

Lateral Sliding Force	=	2,058.7 lbs

Vertical component of active lateral soil pressure IS NOT considered in the calculation of soil bearing

Load Factors

Building Code	
Dead Load	1.200
Live Load	1.600
Earth, H	1.600
Wind, W	1.600
Seismic, E	1.000

Stem Construction

		Bottom		
		Stem OK		
Design Height Above Ftg	ft =	0.00		
Wall Material Above "Ht"	=	Concrete		
Design Method	=	SD	SD	SD
Thickness	=	8.00		
Rebar Size	=	# 5		
Rebar Spacing	=	10.00		
Rebar Placed at	=	Edge		
Design Data				
fb/FB + fa/Fa	=	**0.801**		
Total Force @ Section				
Service Level	lbs =			
Strength Level	lbs =	2,525.3		
Moment....Actual				
Service Level	ft-# =			
Strength Level	ft-# =	7,712.0		
Moment.....Allowable	=	9,623.1		
Shear.....Actual				
Service Level	psi =			
Strength Level	psi =	34.0		
Shear.....Allowable	psi =	51.3		
Anet (Masonry)	in2 =			
Wall Weight	psf =	100.0		
Rebar Depth 'd'	in =	6.19		

Masonry Data

f'm	psi =	
Fs	psi =	
Solid Grouting	=	
Modular Ratio 'n'	=	
Equiv. Solid Thick.	=	
Masonry Block Type	=	
Masonry Design Method	=	ASD

Concrete Data

f'c	psi =	2,500.0
Fy	psi =	60,000.0

Project Title:
Engineer:
Project ID:
Project Descr:

Cantilevered Retaining Wall

Project File: 23-043.ec6

LIC# : KW-06016495, Build:20.23.08.30 CK Engineering LLC (c) ENERCALC INC 1983-2023

DESCRIPTION: 8ft wall

Concrete Stem Rebar Area Details

Bottom Stem	Vertical Reinforcing	Horizontal Reinforcing	
As (based on applied moment) :	0.292 in2/ft		
0.0018bh : 0.0018(12)(8) :	0.1728 in2/ft	Horizontal Reinforcing Options :	
	==========	One layer of :	Two layers of :
Required Area :	0.292 in2/ft	#4@ 13.89 in	#4@ 27.78 in
Provided Area :	0.372 in2/ft	#5@ 21.53 in	#5@ 43.06 in
Maximum Area :	0.8382 in2/ft	#6@ 30.56 in	#6@ 61.11 in

Footing Data

Toe Width	=	3.50 ft
Heel Width	=	2.00
Total Footing Width	=	5.50
Footing Thickness	=	14.00 in
Key Width	=	0.00 in
Key Depth	=	0.00 in
Key Distance from Toe	=	0.00 ft

f'c = 2,500 psi Fy = 40,000 psi
Footing Concrete Density = 150.00 pcf
Min. As % = 0.0018
Cover @ Top 2.00 @ Btm.= 3.00 in

Footing Design Results

		Toe	Heel	
Factored Pressure	=	1,897	0 psf	
Mu' : Upward	=	8,542	1 ft-#	
Mu' : Downward	=	1,286	1,125 ft-#	
Mu: Design	=	7,256 OK	1,124 ft-#	OK
phiMn	=	9,918	10,388 ft-#	
Actual 1-Way Shear	=	23.37	12.14 psi	
Allow 1-Way Shear	=	75.00	75.00 psi	
Toe Reinforcing	=	# 5 @ 11.75 in		
Heel Reinforcing	=	# 5 @ 12.30 in		
Key Reinforcing	=	None Spec'd		
Footing Torsion, Tu	=	0.00 ft-lbs		
Footing Allow. Torsion, phi Tu	=	0.00 ft-lbs		

If torsion exceeds allowable, provide supplemental design for footing torsion.

Other Acceptable Sizes & Spacings

Toe: #4@ 7.57 in, #5@ 11.74 in, #6@ 16.66 in, #7@ 22.73 in, #8@ 29.92 in, #9@ 37.88 in, #10@ 48.11 in

Heel: #4@ 7.93 in, #5@ 12.30 in, #6@ 17.46 in, #7@ 23.80 in, #8@ 31.34 in, #9@ 39.68 in, #10@ 50.39 in

Key: No key defined

Min footing T&S reinf Area	1.66	in2
Min footing T&S reinf Area per foot	0.30	in2 /ft

If one layer of horizontal bars:	If two layers of horizontal bars:
#4@ 7.94 in	#4@ 15.87 in
#5@ 12.30 in	#5@ 24.60 in
#6@ 17.46 in	#6@ 34.92 in

Project Title:
Engineer:
Project ID:
Project Descr:

Cantilevered Retaining Wall

Project File: 23-043.ec6

LIC# : KW-06016495, Build:20.23.08.30 CK Engineering LLC (c) ENERCALC INC 1983-2023

DESCRIPTION: 8ft wall

Summary of Overturning & Resisting Forces & Moments

Item		.....OVERTURNING..... Force lbs	Distance ft	Moment ft-#		.....RESISTING..... Force lbs	Distance ft	Moment ft-#
HL Act Pres (ab water tbl)		1,470.5	3.06	4,493.2	Soil Over HL (ab. water tbl)	1,173.3	4.83	5,671.1
HL Act Pres (be water tbl)					Soil Over HL (bel. water tbl)		4.83	5,671.1
Hydrostatic Force					Water Table			
Buoyant Force	=				Sloped Soil Over Heel	=		
Surcharge over Heel	=				Surcharge Over Heel	=		
Surcharge Over Toe	=				Adjacent Footing Load	=		
Adjacent Footing Load	=				Axial Dead Load on Stem	=		
Added Lateral Load	=				* Axial Live Load on Stem	=		
Load @ Stem Above Soil	=				Soil Over Toe	=		
Seismic Earth Load	=	588.2	4.58	2,695.9	Surcharge Over Toe	=		
	=				Stem Weight(s)	=	850.0	3.83	3,258.3
					Earth @ Stem Transitions	=		
					Footing Weight	=	962.5	2.75	2,646.9
					Key Weight	=			
					Vert. Component	=			
Total	=	2,058.7	**O.T.M.** =	7,189.0	**Total =**	2,985.8 lbs	**R.M.=**		11,576.3

Resisting/Overturning Ratio = **1.61**

Vertical Loads used for Soil Pressure = 2,985.8 lbs

* Axial live load NOT included in total displayed, or used for overturning resistance, but is included for soil pressure calculation.

If seismic is included, the OTM and sliding ratios may be 1.1 per section 1807.2.3 of IBC.

Vertical component of active lateral soil pressure IS NOT considered in the calculation of Sliding Resistance.

Vertical component of active lateral soil pressure IS NOT considered in the calculation of Overturning Resistance.

Tilt

Horizontal Deflection at Top of Wall due to settlement of soil

(Deflection due to wall bending not considered)

Soil Spring Reaction Modulus	250.0	pci
Horizontal Defl @ Top of Wall (approximate only)	0.058	in

The above calculation is not valid if the heel soil bearing pressure exceeds that of the toe, because the wall would then tend to rotate into the retained soil.

Cantilevered Retaining Wall

LIC# : KW-06016495, Build:20.23.08.30 CK Engineering LLC (c) ENERCALC INC 1983-2023

DESCRIPTION: 8ft wall

Rebar Lap & Embedment Lengths Information

Stem Design Segment: Bottom
Stem Design Height: 0.00 ft above top of footing

Lap Splice length for #5 bar specified in this stem design segment (25.4.2.4a) =	23.40 in
Development length for #5 bar specified in this stem design segment =	18.00 in
Hooked embedment length into footing for #5 bar specified in this stem design segment =	0.00 in
As Provided =	0.3720 in2/ft
As Required =	0.2920 in2/ft

Cantilevered Retaining Wall

LIC# : KW-06016495, Build:20.23.08.30 CK Engineering LLC (c) ENERCALC INC 1983-2023

DESCRIPTION: 8ft wall

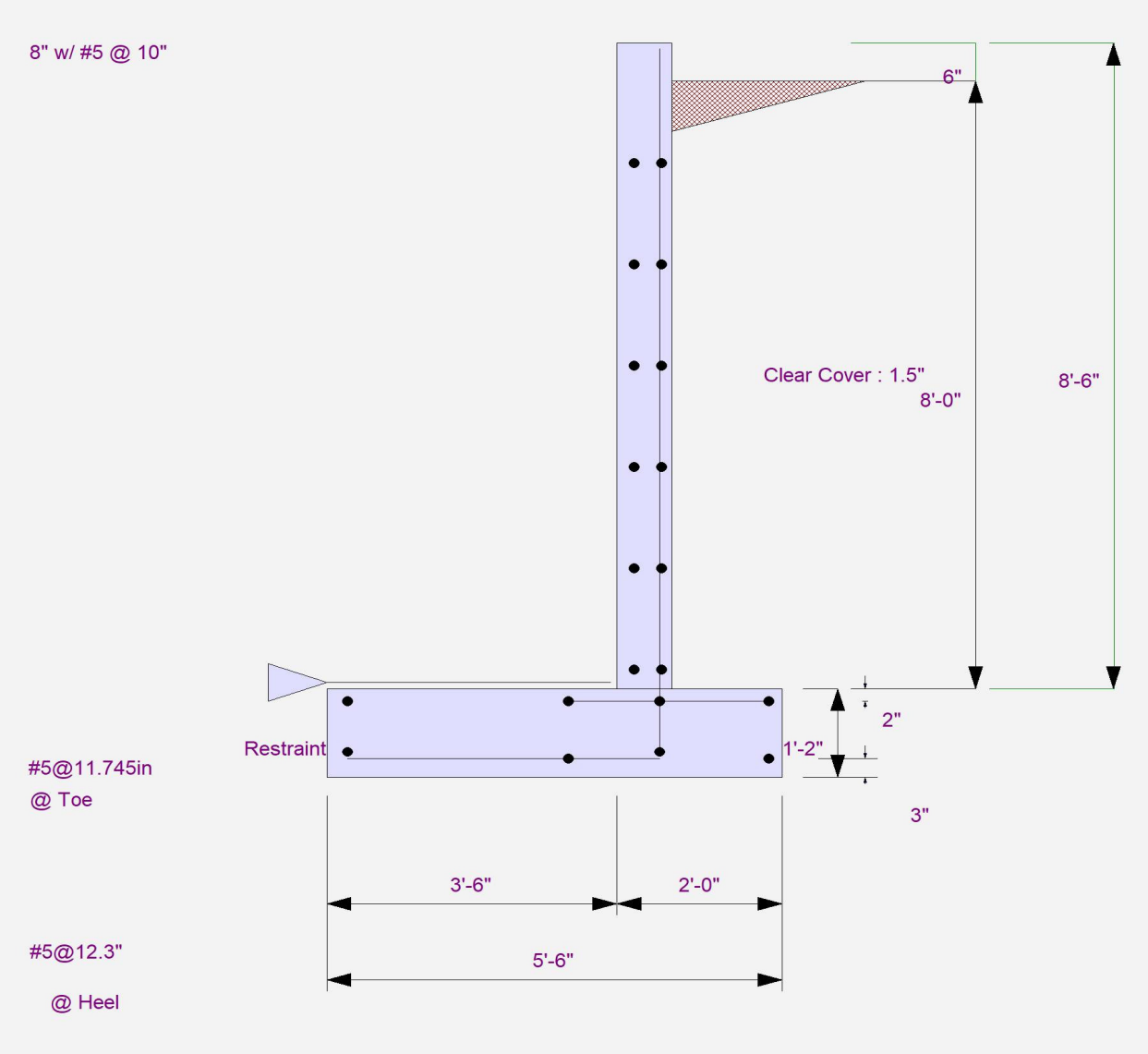

Project Title:
Engineer:
Project ID:
Project Descr:

Cantilevered Retaining Wall

Project File: 23-043.ec6

LIC# : KW-06016495, Build:20.23.08.30 CK Engineering LLC (c) ENERCALC INC 1983-2023

DESCRIPTION: 8ft wall

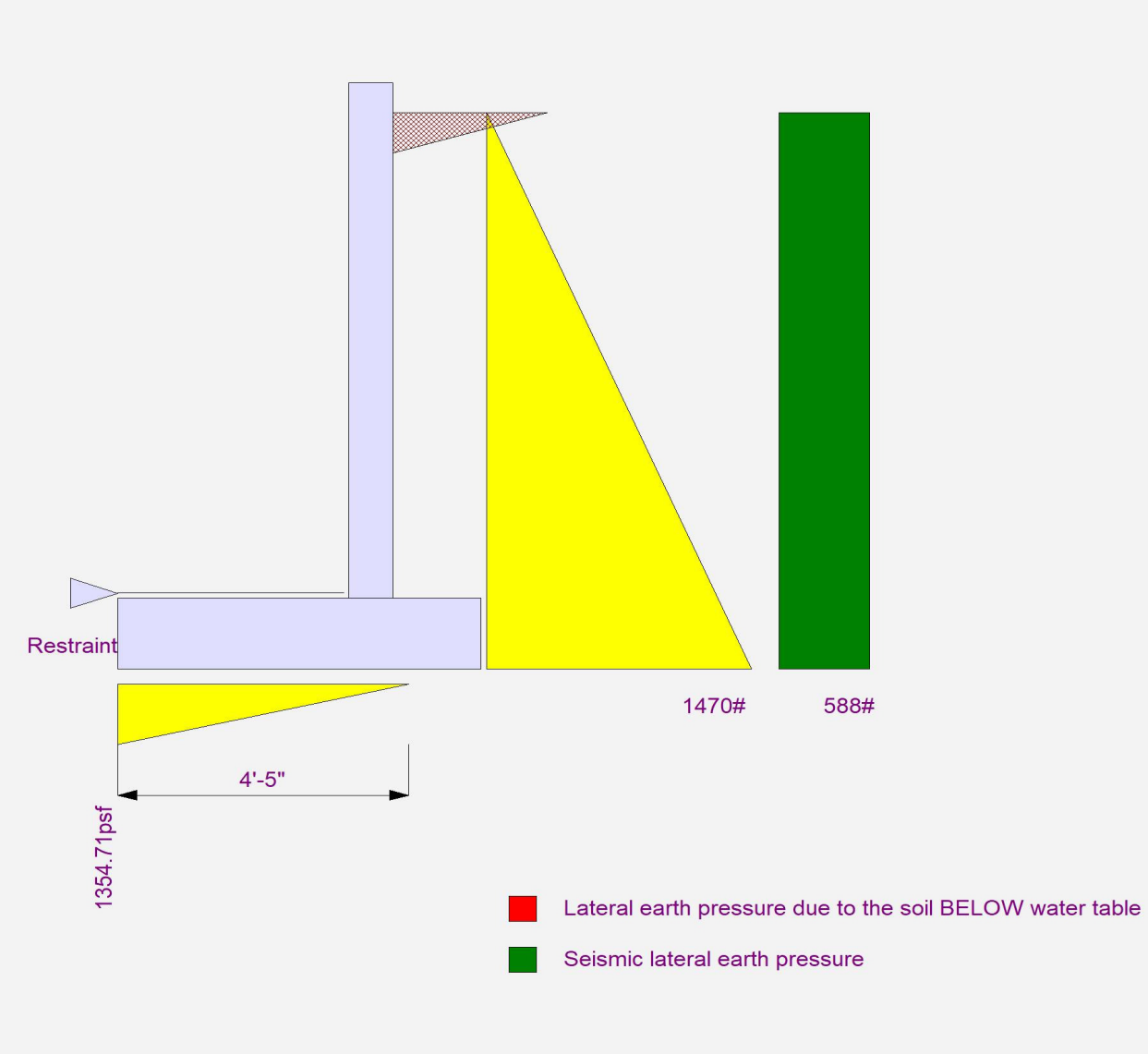

Project Title:
Engineer:
Project ID:
Project Descr:

Cantilevered Retaining Wall

Project File: 23-043.ec6

LIC# : KW-06016495, Build:20.23.08.30 CK Engineering LLC (c) ENERCALC INC 1983-2023

DESCRIPTION: 9ft wall

Code Reference

Calculations per IBC 2021 1807.3, ASCE 7-16

Criteria

Retained Height	=	9.00 ft
Wall height above soil	=	0.50 ft
Slope Behind Wall	=	0.00
Height of Soil over Toe	=	0.00 in
Water table above bottom of footing	=	0.0 ft

Soil Data

Allow Soil Bearing	=	1,500.0 psf
Equivalent Fluid Pressure Method		
Active Heel Pressure	=	35.0 psf/ft
	=	
Passive Pressure	=	150.0 psf/ft
Soil Density, Heel	=	110.00 pcf
Soil Density, Toe	=	110.00 pcf
Footing||Soil Friction	=	0.400
Soil height to ignore for passive pressure	=	12.00 in

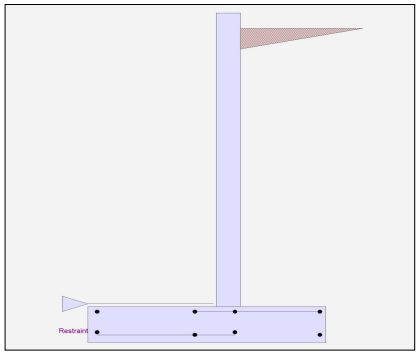

Surcharge Loads

Surcharge Over Heel	=	0.0 psf
Used To Resist Sliding & Overturning		
Surcharge Over Toe	=	0.0
Used for Sliding & Overturning		

Lateral Load Applied to Stem

Lateral Load	=	0.0 #/ft
...Height to Top	=	0.00 ft
...Height to Bottom	=	0.00 ft
Load Type	=	Wind (W) (Service Level)
Wind on Exposed Stem (Strength Level)	=	0.0 psf

Adjacent Footing Load

Adjacent Footing Load	=	0.0 lbs
Footing Width	=	0.00 ft
Eccentricity	=	0.00 in
Wall to Ftg CL Dist	=	0.00 ft
Footing Type		Spread Footing
Base Above/Below Soil at Back of Wall	=	0.0 ft
Poisson's Ratio	=	0.300

Axial Load Applied to Stem

Axial Dead Load	=	0.0 lbs
Axial Live Load	=	0.0 lbs
Axial Load Eccentricity	=	0.0 in

Earth Pressure Seismic Load

Method : Uniform		
Multiplier Used	=	10.000
(Multiplier used on soil density)		
Uniform Seismic Force	=	101.667
Total Seismic Force	=	1,033.611

Project Title:
Engineer:
Project ID:
Project Descr:

Cantilevered Retaining Wall

Project File: 23-043.ec6

LIC# : KW-06016495, Build:20.23.08.30 CK Engineering LLC (c) ENERCALC INC 1983-2023

DESCRIPTION: 9ft wall

Design Summary

Wall Stability Ratios

Overturning	=	2.00	OK
Slab Resists All Sliding !			
Global Stability	=	1.62	
Total Bearing Load	=	4,398 lbs	
...resultant ecc.	=	12.12 in	
Eccentricity within middle third			
Soil Pressure @ Toe	=	1,307 psf	OK
Soil Pressure @ Heel	=	46 psf	OK
Allowable	=	1,500 psf	
Soil Pressure Less Than Allowable			
ACI Factored @ Toe	=	1,830 psf	
ACI Factored @ Heel	=	64 psf	
Footing Shear @ Toe	=	26.3 psi	OK
Footing Shear @ Heel	=	17.2 psi	OK
Allowable	=	75.0 psi	

Sliding Calcs

Lateral Sliding Force	=	2,532.3 lbs	

Vertical component of active lateral soil pressure IS NOT considered in the calculation of soil bearing

Load Factors

Building Code	
Dead Load	1.200
Live Load	1.600
Earth, H	1.600
Wind, W	1.600
Seismic, E	1.000

Stem Construction

		Bottom		
		Stem OK		
Design Height Above Ftg	ft =	0.00		
Wall Material Above "Ht"	=	Concrete		
Design Method	=	SD	SD	SD
Thickness	=	8.00		
Rebar Size	=	# 5		
Rebar Spacing	=	8.00		
Rebar Placed at	=	Edge		

Design Data

fb/FB + fa/Fa	=	**0.925**
Total Force @ Section		
Service Level	lbs =	
Strength Level	lbs =	3,183.0
Moment....Actual		
Service Level	ft-# =	
Strength Level	ft-# =	10,921.5
Moment.....Allowable	=	11,799.2
Shear.....Actual		
Service Level	psi =	
Strength Level	psi =	42.9
Shear.....Allowable	psi =	55.3
Anet (Masonry)	in2 =	
Wall Weight	psf =	100.0
Rebar Depth 'd'	in =	6.19

Masonry Data

f'm	psi =	
Fs	psi =	
Solid Grouting	=	
Modular Ratio 'n'	=	
Equiv. Solid Thick.	=	
Masonry Block Type	=	
Masonry Design Method	=	ASD

Concrete Data

f'c	psi =	2,500.0
Fy	psi =	60,000.0

Project Title:
Engineer:
Project ID:
Project Descr:

Cantilevered Retaining Wall

Project File: 23-043.ec6

LIC# : KW-06016495, Build:20.23.08.30 CK Engineering LLC (c) ENERCALC INC 1983-2023

DESCRIPTION: 9ft wall

Concrete Stem Rebar Area Details

Bottom Stem	Vertical Reinforcing	Horizontal Reinforcing	
As (based on applied moment) :	0.4135 in2/ft		
0.0018bh : 0.0018(12)(8) :	0.1728 in2/ft	Horizontal Reinforcing Options :	
	==========	One layer of :	Two layers of :
Required Area :	0.4135 in2/ft	#4@ 13.89 in	#4@ 27.78 in
Provided Area :	0.465 in2/ft	#5@ 21.53 in	#5@ 43.06 in
Maximum Area :	0.8382 in2/ft	#6@ 30.56 in	#6@ 61.11 in

Footing Data

Toe Width	=	3.50 ft
Heel Width	=	3.00
Total Footing Width	=	6.50
Footing Thickness	=	14.00 in
Key Width	=	0.00 in
Key Depth	=	0.00 in
Key Distance from Toe	=	0.00 ft

f'c = 2,500 psi Fy = 60,000 psi
Footing Concrete Density = 150.00 pcf
Min. As % = 0.0018
Cover @ Top 2.00 @ Btm.= 3.00 in

Footing Design Results

		Toe	Heel	
Factored Pressure	=	1,830	64 psf	
Mu' : Upward	=	9,268	750 ft-#	
Mu' : Downward	=	1,286	3,806 ft-#	
Mu: Design	=	7,982 OK	3,056 ft-#	OK
phiMn	=	14,059	15,420 ft-#	
Actual 1-Way Shear	=	26.32	17.19 psi	
Allow 1-Way Shear	=	75.00	75.00 psi	
Toe Reinforcing	=	# 5 @ 12.30 in		
Heel Reinforcing	=	# 5 @ 12.30 in		
Key Reinforcing	=	None Spec'd		
Footing Torsion, Tu	=	0.00 ft-lbs		
Footing Allow. Torsion, phi Tu	=	0.00 ft-lbs		

If torsion exceeds allowable, provide supplemental design for footing torsion.

Other Acceptable Sizes & Spacings

Toe: #4@ 7.93 in, #5@ 12.30 in, #6@ 17.46 in, #7@ 23.80 in, #8@ 31.34 in, #9@ 39.68 in, #10@ 50.39 in

Heel: #4@ 7.93 in, #5@ 12.30 in, #6@ 17.46 in, #7@ 23.80 in, #8@ 31.34 in, #9@ 39.68 in, #10@ 50.39 in

Key: No key defined

Min footing T&S reinf Area 1.97 in2
Min footing T&S reinf Area per foot 0.30 in2 /ft

If one layer of horizontal bars:	If two layers of horizontal bars:
#4@ 7.94 in	#4@ 15.87 in
#5@ 12.30 in	#5@ 24.60 in
#6@ 17.46 in	#6@ 34.92 in

Project Title:
Engineer:
Project ID:
Project Descr:

Cantilevered Retaining Wall

Project File: 23-043.ec6

LIC# : KW-06016495, Build:20.23.08.30 CK Engineering LLC (c) ENERCALC INC 1983-2023

DESCRIPTION: 9ft wall

Summary of Overturning & Resisting Forces & Moments

Item		.....OVERTURNING..... Force lbs	Distance ft	Moment ft-#		.....RESISTING..... Force lbs	Distance ft	Moment ft-#
HL Act Pres (ab water tbl)		1,808.8	3.39	6,129.9	Soil Over HL (ab. water tbl)	2,310.0	5.33	12,320.0
HL Act Pres (be water tbl)					Soil Over HL (bel. water tbl)		5.33	12,320.0
Hydrostatic Force					Water Table			
Buoyant Force	=				Sloped Soil Over Heel	=		
Surcharge over Heel	=				Surcharge Over Heel	=		
Surcharge Over Toe	=				Adjacent Footing Load	=		
Adjacent Footing Load	=				Axial Dead Load on Stem	=		
Added Lateral Load	=				* Axial Live Load on Stem	=		
Load @ Stem Above Soil	=				Soil Over Toe	=		
Seismic Earth Load	=	723.5	5.08	3,677.9	Surcharge Over Toe	=		
	=				Stem Weight(s)	=	950.0	3.83	3,641.7
					Earth @ Stem Transitions	=		
					Footing Weight	=	1,137.5	3.25	3,696.9
					Key Weight	=			
					Vert. Component	=			
Total	=	2,532.3	**O.T.M.** =	9,807.8	**Total =**		4,397.5 lbs	**R.M.=**	19,658.5

Resisting/Overturning Ratio = **2.00**

Vertical Loads used for Soil Pressure = 4,397.5 lbs

* Axial live load NOT included in total displayed, or used for overturning resistance, but is included for soil pressure calculation.

If seismic is included, the OTM and sliding ratios may be 1.1 per section 1807.2.3 of IBC.

Vertical component of active lateral soil pressure IS NOT considered in the calculation of Sliding Resistance.

Vertical component of active lateral soil pressure IS NOT considered in the calculation of Overturning Resistance.

Tilt

Horizontal Deflection at Top of Wall due to settlement of soil

(Deflection due to wall bending not considered)

Soil Spring Reaction Modulus	250.0	pci
Horizontal Defl @ Top of Wall (approximate only)	0.053	in

The above calculation is not valid if the heel soil bearing pressure exceeds that of the toe, because the wall would then tend to rotate into the retained soil.

Cantilevered Retaining Wall

LIC# : KW-06016495, Build:20.23.08.30 CK Engineering LLC (c) ENERCALC INC 1983-2023

DESCRIPTION: 9ft wall

Rebar Lap & Embedment Lengths Information

Stem Design Segment: Bottom
Stem Design Height: 0.00 ft above top of footing

Lap Splice length for #5 bar specified in this stem design segment (25.4.2.4a) =	23.40 in
Development length for #5 bar specified in this stem design segment =	18.00 in
Hooked embedment length into footing for #5 bar specified in this stem design segment =	0.00 in
As Provided =	0.4650 in2/ft
As Required =	0.4135 in2/ft

Project Title:
Engineer:
Project ID:
Project Descr:

Cantilevered Retaining Wall

Project File: 23-043.ec6

LIC# : KW-06016495, Build:20.23.08.30 CK Engineering LLC (c) ENERCALC INC 1983-2023

DESCRIPTION: 9ft wall

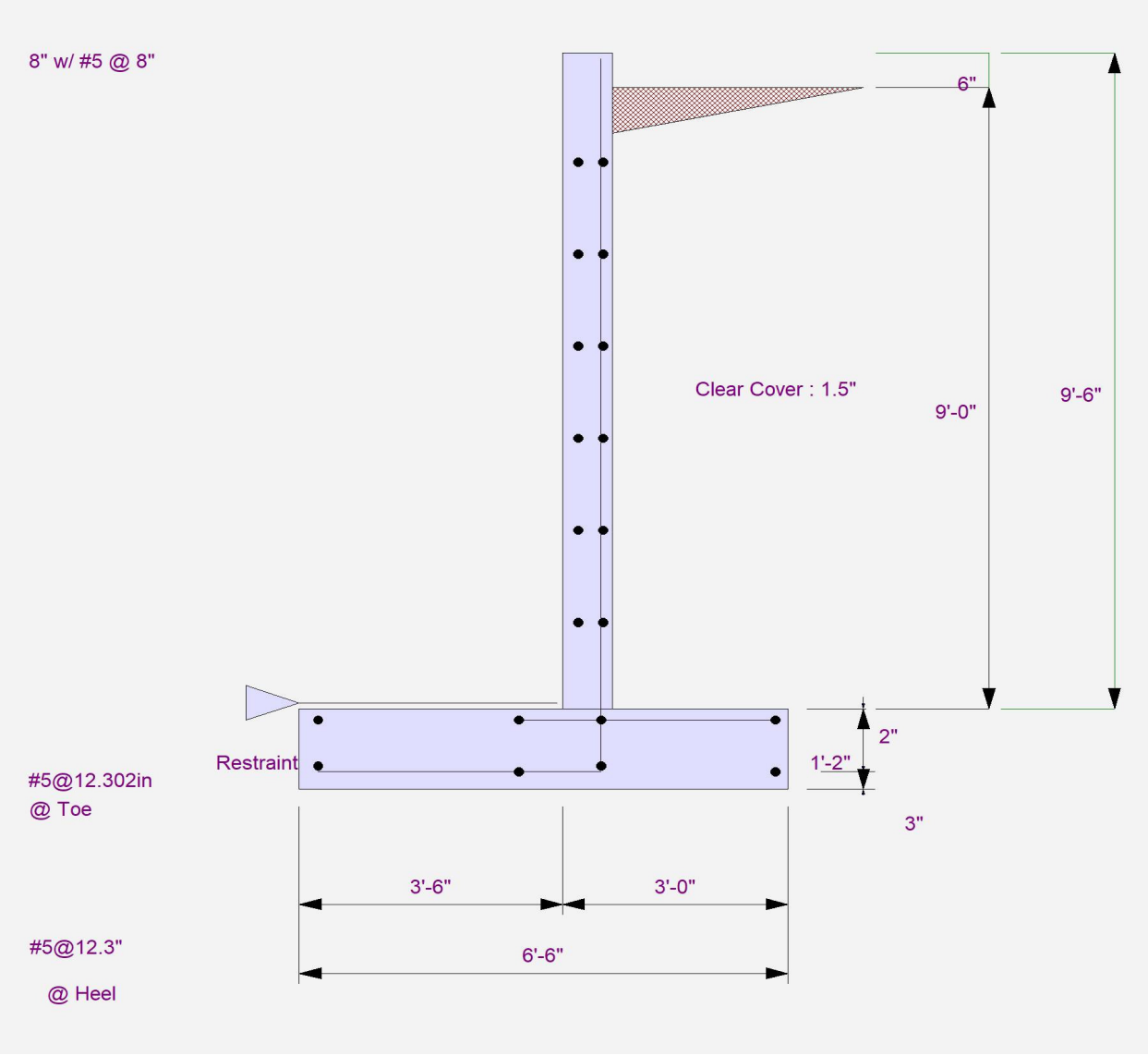

Project Title:
Engineer:
Project ID:
Project Descr:

Cantilevered Retaining Wall

Project File: 23-043.ec6

LIC# : KW-06016495, Build:20.23.08.30 CK Engineering LLC (c) ENERCALC INC 1983-2023

DESCRIPTION: 9ft wall

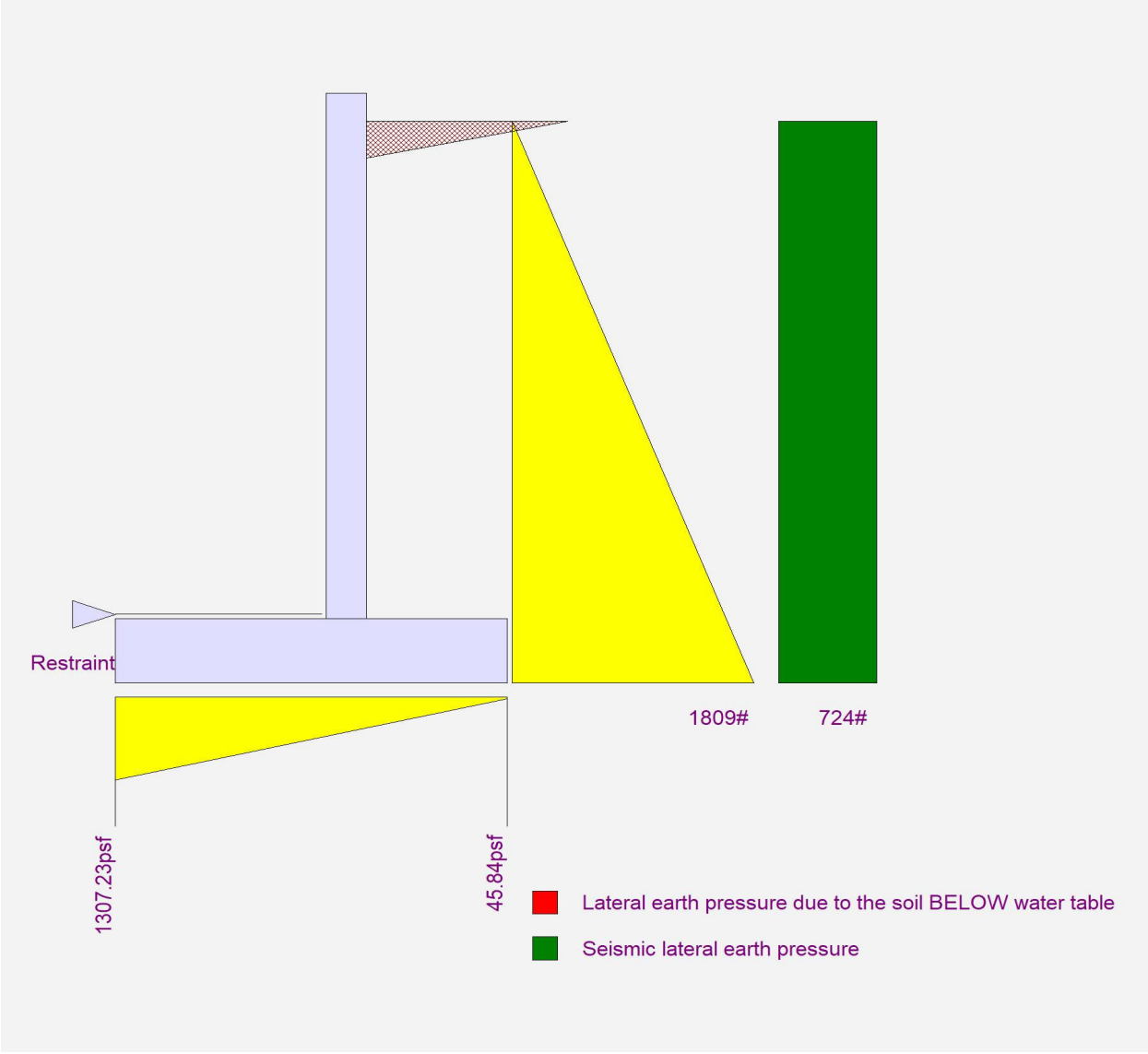

Project Title:
Engineer:
Project ID:
Project Descr:

Cantilevered Retaining Wall

Project File: 23-043.ec6

LIC# : KW-06016495, Build:20.23.08.30 CK Engineering LLC (c) ENERCALC INC 1983-2023

DESCRIPTION: 4ft ret. wall with Key

Code Reference

Calculations per IBC 2021 1807.3, ASCE 7-16

Criteria

Retained Height	=	4.00 ft
Wall height above soil	=	0.50 ft
Slope Behind Wall	=	0.00
Height of Soil over Toe	=	0.00 in
Water table above bottom of footing	=	0.0 ft

Soil Data

Allow Soil Bearing	=	1,500.0 psf
Equivalent Fluid Pressure Method		
Active Heel Pressure	=	35.0 psf/ft
	=	
Passive Pressure	=	150.0 psf/ft
Soil Density, Heel	=	110.00 pcf
Soil Density, Toe	=	110.00 pcf
Footing||Soil Friction	=	0.400
Soil height to ignore for passive pressure	=	12.00 in

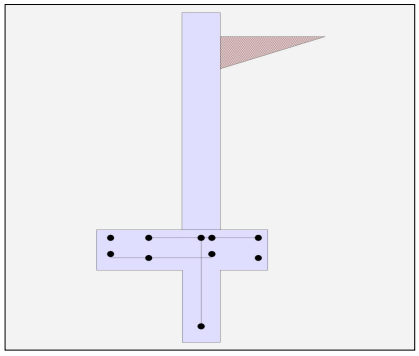

Surcharge Loads

Surcharge Over Heel	=	0.0 psf
NOT Used To Resist Sliding & Overturning		
Surcharge Over Toe	=	0.0
NOT Used for Sliding & Overturning		

Lateral Load Applied to Stem

Lateral Load	=	0.0 #/ft
...Height to Top	=	0.00 ft
...Height to Bottom	=	0.00 ft
Load Type	=	Wind (W) (Service Level)
Wind on Exposed Stem (Strength Level)	=	0.0 psf

Adjacent Footing Load

Adjacent Footing Load	=	0.0 lbs
Footing Width	=	0.00 ft
Eccentricity	=	0.00 in
Wall to Ftg CL Dist	=	0.00 ft
Footing Type		Spread Footing
Base Above/Below Soil at Back of Wall	=	0.0 ft
Poisson's Ratio	=	0.300

Axial Load Applied to Stem

Axial Dead Load	=	0.0 lbs
Axial Live Load	=	0.0 lbs
Axial Load Eccentricity	=	0.0 in

Earth Pressure Seismic Load

Method : Uniform		
Multiplier Used	=	6.000
(Multiplier used on soil density)		
Uniform Seismic Force	=	29.000
Total Seismic Force	=	140.167

Stem Weight Seismic Load

F_p / W_p Weight Multiplier = 0.200 g

Added seismic base force 63.0 lbs

Project Title:
Engineer:
Project ID:
Project Descr:

Cantilevered Retaining Wall

Project File: 23-043.ec6

LIC# : KW-06016495, Build:20.23.08.30 CK Engineering LLC (c) ENERCALC INC 1983-2023

DESCRIPTION: 4ft ret. wall with Key

Design Summary

Wall Stability Ratios			
Overturning	=	2.39	OK
Sliding	=	1.53	OK
Global Stability	=	1.97	
Total Bearing Load	=	1,342 lbs	
...resultant ecc.	=	4.41 in	
Eccentricity within middle third			
Soil Pressure @ Toe	=	776 psf	OK
Soil Pressure @ Heel	=	119 psf	OK
Allowable	=	1,500 psf	
Soil Pressure Less Than Allowable			
ACI Factored @ Toe	=	1,086 psf	
ACI Factored @ Heel	=	166 psf	
Footing Shear @ Toe	=	9.7 psi	OK
Footing Shear @ Heel	=	3.6 psi	OK
Allowable	=	75.0 psi	
Sliding Calcs			
Lateral Sliding Force	=	569.9 lbs	
less 100% Passive Force	-	333.3 lbs	
less 100% Friction Force	-	536.7 lbs	
Added Force Req'd	=	0.0 lbs	OK
....for 1.5 Stability	=	0.0 lbs	OK

Vertical component of active lateral soil pressure IS NOT considered in the calculation of soil bearing

Load Factors

Building Code	
Dead Load	1.200
Live Load	1.600
Earth, H	1.600
Wind, W	1.600
Seismic, E	1.000

Stem Construction

		Bottom		
		Stem OK		
Design Height Above Ftg	ft =	0.00		
Wall Material Above "Ht"	=	Concrete		
Design Method	=	SD	SD	SD
Thickness	=	8.00		
Rebar Size	=	# 4		
Rebar Spacing	=	12.00		
Rebar Placed at	=	Edge		
Design Data				
fb/FB + fa/Fa	=	**0.282**		
Total Force @ Section				
Service Level	lbs =			
Strength Level	lbs =	654.0		
Moment....Actual				
Service Level	ft-# =			
Strength Level	ft-# =	1,031.8		
Moment.....Allowable	=	3,655.6		
Shear.....Actual				
Service Level	psi =			
Strength Level	psi =	8.7		
Shear.....Allowable	psi =	41.6		
Anet (Masonry)	in2 =			
Wall Weight	psf =	100.0		
Rebar Depth 'd'	in =	6.25		
Masonry Data				
f'm	psi =			
Fs	psi =			
Solid Grouting	=			
Modular Ratio 'n'	=			
Equiv. Solid Thick.	=			
Masonry Block Type	=			
Masonry Design Method	=	ASD		
Concrete Data				
f'c	psi =	2,500.0		
Fy	psi =	40,000.0		

Project Title:
Engineer:
Project ID:
Project Descr:

Cantilevered Retaining Wall

Project File: 23-043.ec6

LIC# : KW-06016495, Build:20.23.08.30 CK Engineering LLC (c) ENERCALC INC 1983-2023

DESCRIPTION: 4ft ret. wall with Key

Concrete Stem Rebar Area Details

Bottom Stem	Vertical Reinforcing	Horizontal Reinforcing	
As (based on applied moment) :	0.058 in2/ft		
0.0018bh : 0.0018(12)(8) :	0.1728 in2/ft	Horizontal Reinforcing Options :	
	==========	One layer of :	Two layers of :
Required Area :	0.1728 in2/ft	#4@ 13.89 in	#4@ 27.78 in
Provided Area :	0.2 in2/ft	#5@ 21.53 in	#5@ 43.06 in
Maximum Area :	1.27 in2/ft	#6@ 30.56 in	#6@ 61.11 in

Footing Data

Toe Width	=	1.50 ft
Heel Width	=	1.50
Total Footing Width	=	3.00
Footing Thickness	=	10.00 in
Key Width	=	8.00 in
Key Depth	=	18.00 in
Key Distance from Toe	=	1.50 ft

f'c = 2,500 psi Fy = 40,000 psi
Footing Concrete Density = 150.00 pcf
Min. As % = 0.0018
Cover @ Top 2.00 @ Btm.= 3.00 in

Footing Design Results

		Toe	Heel	
Factored Pressure	=	1,086	166 psf	
Mu' : Upward	=	1,049	87 ft-#	
Mu' : Downward	=	169	235 ft-#	
Mu: Design	=	881 OK	148 ft-#	OK
phiMn	=	4,307	4,961 ft-#	
Actual 1-Way Shear	=	9.70	3.56 psi	
Allow 1-Way Shear	=	75.00	75.00 psi	
Toe Reinforcing	=	# 4 @ 11.00 in		
Heel Reinforcing	=	# 4 @ 11.00 in		
Key Reinforcing	=	# 4 @ 13.89 in		
Footing Torsion, Tu	=	0.00 ft-lbs		
Footing Allow. Torsion, phi Tu	=	0.00 ft-lbs		

If torsion exceeds allowable, provide supplemental design for footing torsion.

Other Acceptable Sizes & Spacings

Toe: #4@ 11.11 in, #5@ 17.22 in, #6@ 24.44 in, #7@ 33.33 in, #8@ 43.88 in, #9@ 55.55 in, #10@ 70.55 in

Heel: #4@ 11.11 in, #5@ 17.22 in, #6@ 24.44 in, #7@ 33.33 in, #8@ 43.88 in, #9@ 55.55 in, #10@ 70.55 in

Key: #4@ 13.88 in, #5@ 18 in, #6@ 18 in, #7@ 18 in

Min footing T&S reinf Area 0.65 in2
Min footing T&S reinf Area per foot 0.22 in2 /ft

If one layer of horizontal bars:	If two layers of horizontal bars:
#4@ 11.11 in	#4@ 22.22 in
#5@ 17.22 in	#5@ 34.44 in
#6@ 24.44 in	#6@ 48.89 in

Project Title:
Engineer:
Project ID:
Project Descr:

Cantilevered Retaining Wall

Project File: 23-043.ec6

LIC# : KW-06016495, Build:20.23.08.30 CK Engineering LLC (c) ENERCALC INC 1983-2023

DESCRIPTION: 4ft ret. wall with Key

Summary of Overturning & Resisting Forces & Moments

Item		.....OVERTURNING..... Force lbs	Distance ft	Moment ft-#		.....RESISTING..... Force lbs	Distance ft	Moment ft-#
HL Act Pres (ab water tbl)		408.8	1.61	658.7	Soil Over HL (ab. water tbl)	366.7	2.58	947.2
HL Act Pres (be water tbl)					Soil Over HL (bel. water tbl)		2.58	947.2
Hydrostatic Force					Water Table			
Buoyant Force	=				Sloped Soil Over Heel	=		
Surcharge over Heel	=				Surcharge Over Heel	=		
Surcharge Over Toe	=				Adjacent Footing Load	=		
Adjacent Footing Load	=				Axial Dead Load on Stem	=		
Added Lateral Load	=				* Axial Live Load on Stem	=		
Load @ Stem Above Soil	=				Soil Over Toe	=		
Seismic Earth Load	=	98.1	2.42	237.1	Surcharge Over Toe	=		
Seismic Stem Self Wt	=	63.0	3.08	194.3	Stem Weight(s)	=	450.0	1.83	825.0
					Earth @ Stem Transitions	=		
					Footing Weight	=	375.0	1.50	562.5
					Key Weight	=	150.0	1.83	275.0
					Vert. Component	=			
Total	=	569.9	**O.T.M.** =	1,090.0	**Total =**		1,341.7 lbs	**R.M.=**	2,609.7

Resisting/Overturning Ratio = **2.39**

Vertical Loads used for Soil Pressure = 1,341.7 lbs

* Axial live load NOT included in total displayed, or used for overturning resistance, but is included for soil pressure calculation.

If seismic is included, the OTM and sliding ratios may be 1.1 per section 1807.2.3 of IBC.

Vertical component of active lateral soil pressure IS NOT considered in the calculation of Sliding Resistance.

Vertical component of active lateral soil pressure IS NOT considered in the calculation of Overturning Resistance.

Tilt

Horizontal Deflection at Top of Wall due to settlement of soil

(Deflection due to wall bending not considered)

Soil Spring Reaction Modulus	250.0	pci
Horizontal Defl @ Top of Wall (approximate only)	0.032	in

The above calculation is not valid if the heel soil bearing pressure exceeds that of the toe, because the wall would then tend to rotate into the retained soil.

Cantilevered Retaining Wall

LIC# : KW-06016495, Build:20.23.08.30 CK Engineering LLC (c) ENERCALC INC 1983-2023

DESCRIPTION: 4ft ret. wall with Key

Rebar Lap & Embedment Lengths Information

Stem Design Segment: Bottom
Stem Design Height: 0.00 ft above top of footing

Lap Splice length for #4 bar specified in this stem design segment (25.4.2.4a) =	15.60 in
Development length for #4 bar specified in this stem design segment =	12.00 in
Hooked embedment length into footing for #4 bar specified in this stem design segment =	0.00 in
As Provided =	0.2000 in2/ft
As Required =	0.1728 in2/ft

Project Title:
Engineer:
Project ID:
Project Descr:

Cantilevered Retaining Wall

Project File: 23-043.ec6

LIC# : KW-06016495, Build:20.23.08.30 CK Engineering LLC (c) ENERCALC INC 1983-2023

DESCRIPTION: 4ft ret. wall with Key

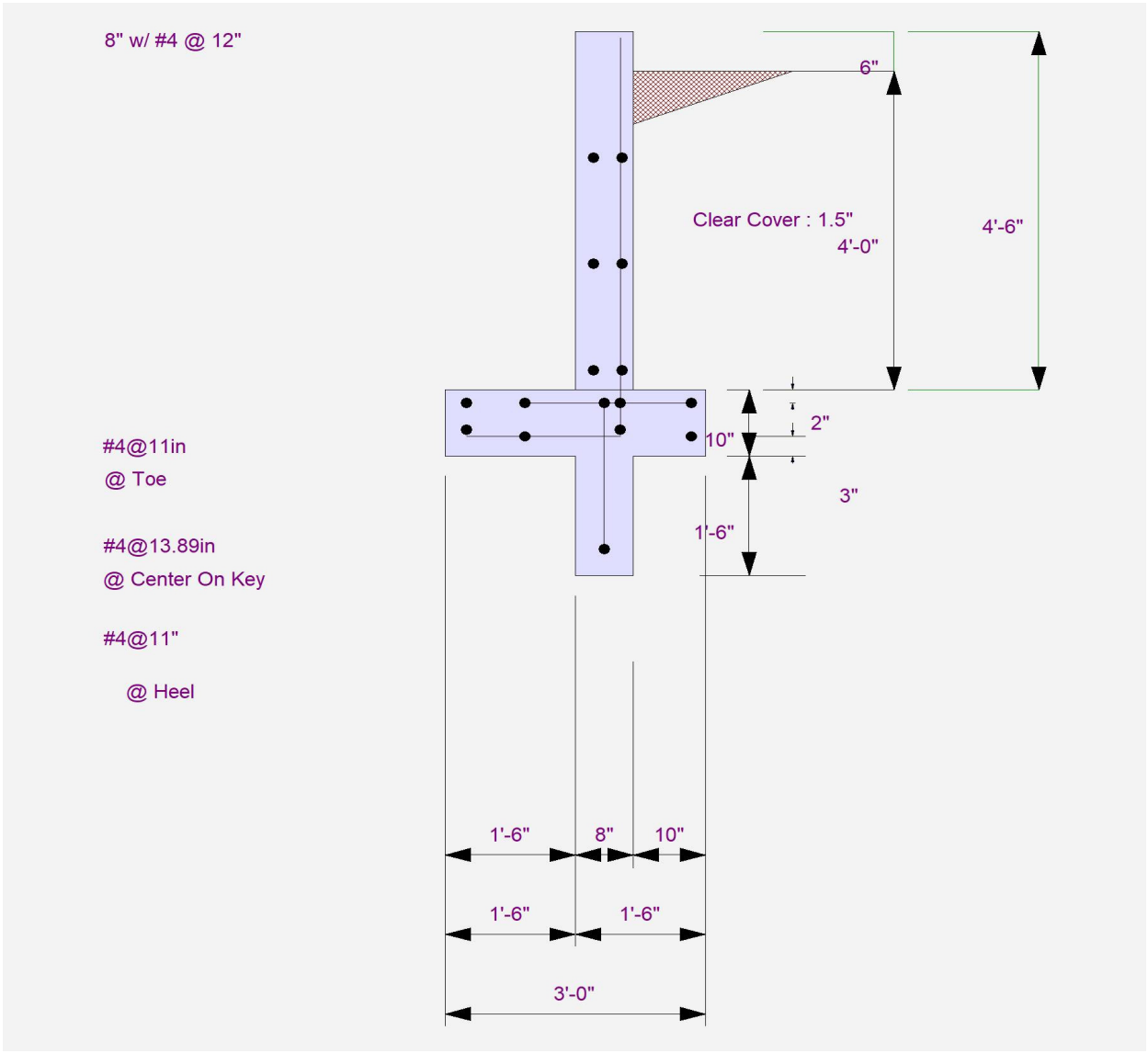

Project Title:
Engineer:
Project ID:
Project Descr:

Cantilevered Retaining Wall

Project File: 23-043.ec6

LIC# : KW-06016495, Build:20.23.08.30 CK Engineering LLC (c) ENERCALC INC 1983-2023

DESCRIPTION: 4ft ret. wall with Key

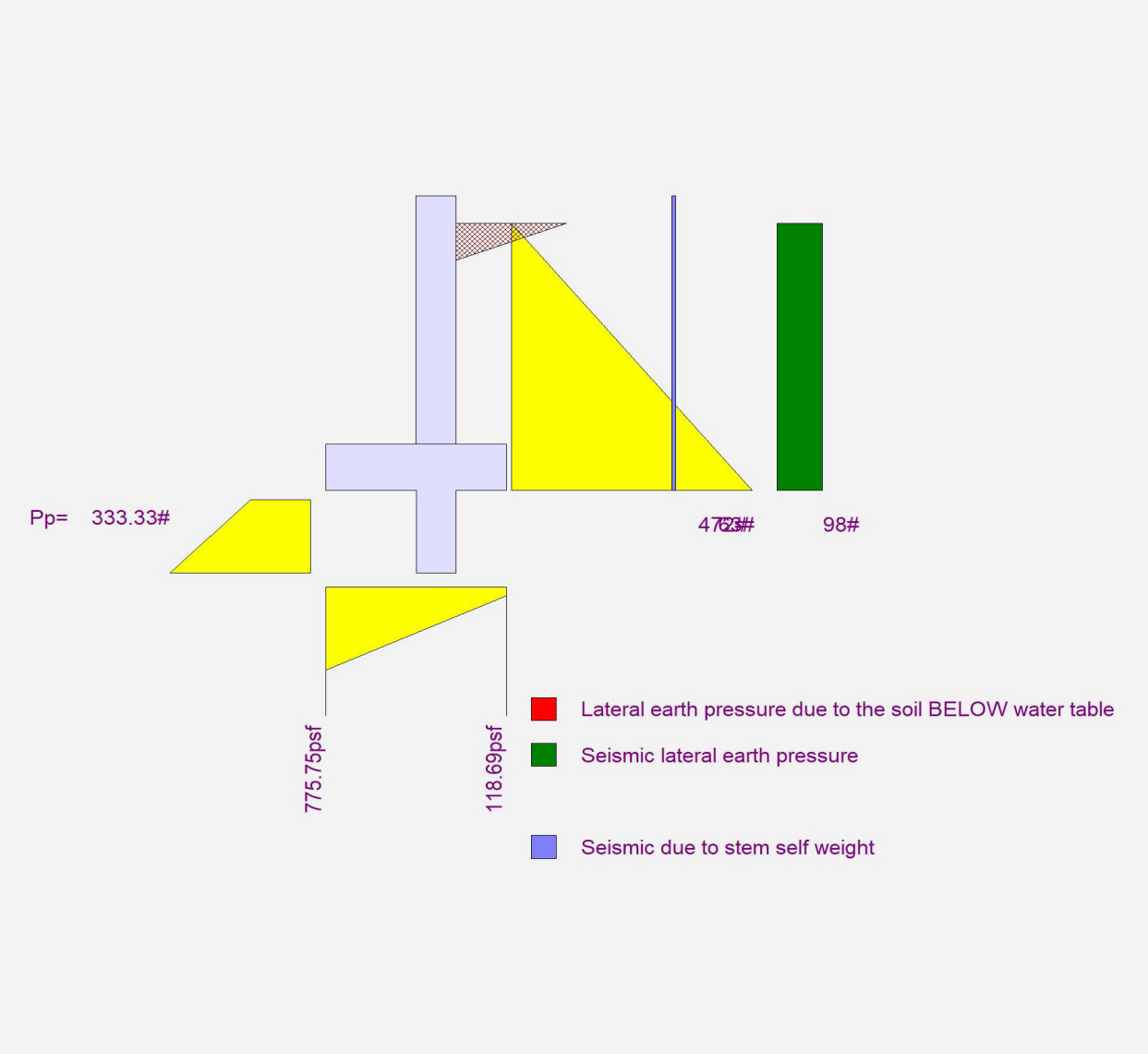

Project Title:
Engineer:
Project ID:
Project Descr:

Cantilevered Retaining Wall

Project File: 23-043.ec6

LIC# : KW-06016495, Build:20.23.08.30 CK Engineering LLC (c) ENERCALC INC 1983-2023

DESCRIPTION: 6ft ret. wall with Key

Code Reference

Calculations per IBC 2021 1807.3, ASCE 7-16

Criteria

Retained Height	=	6.00 ft
Wall height above soil	=	0.50 ft
Slope Behind Wall	=	0.00
Height of Soil over Toe	=	0.00 in
Water table above bottom of footing	=	0.0 ft

Soil Data

Allow Soil Bearing	=	1,500.0 psf
Equivalent Fluid Pressure Method		
Active Heel Pressure	=	35.0 psf/ft
	=	
Passive Pressure	=	150.0 psf/ft
Soil Density, Heel	=	110.00 pcf
Soil Density, Toe	=	110.00 pcf
Footing||Soil Friction	=	0.400
Soil height to ignore for passive pressure	=	12.00 in

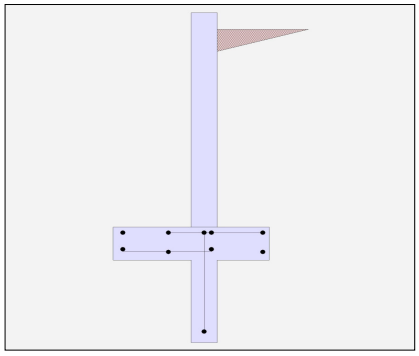

Surcharge Loads

Surcharge Over Heel	=	0.0 psf
Used To Resist Sliding & Overturning		
Surcharge Over Toe	=	0.0
Used for Sliding & Overturning		

Lateral Load Applied to Stem

Lateral Load	=	0.0 #/ft
...Height to Top	=	0.00 ft
...Height to Bottom	=	0.00 ft
Load Type	=	Wind (W) (Service Level)
Wind on Exposed Stem (Strength Level)	=	0.0 psf

Adjacent Footing Load

Adjacent Footing Load	=	0.0 lbs
Footing Width	=	0.00 ft
Eccentricity	=	0.00 in
Wall to Ftg CL Dist	=	0.00 ft
Footing Type		Spread Footing
Base Above/Below Soil at Back of Wall	=	0.0 ft
Poisson's Ratio	=	0.300

Axial Load Applied to Stem

Axial Dead Load	=	0.0 lbs
Axial Live Load	=	0.0 lbs
Axial Load Eccentricity	=	0.0 in

Earth Pressure Seismic Load

Method : Uniform

Multiplier Used	=	6.000
(Multiplier used on soil density)		
Uniform Seismic Force	=	42.000
Total Seismic Force	=	294.000

Stem Weight Seismic Load

F_p / W_p Weight Multiplier = 0.200 g

Added seismic base force 91.0 lbs

Project Title:
Engineer:
Project ID:
Project Descr:

Cantilevered Retaining Wall

Project File: 23-043.ec6

LIC# : KW-06016495, Build:20.23.08.30 CK Engineering LLC (c) ENERCALC INC 1983-2023

DESCRIPTION: 6ft ret. wall with Key

Design Summary

Wall Stability Ratios

Overturning	=	2.01	OK
Sliding	=	1.56	OK
Global Stability	=	1.76	

Total Bearing Load	=	2,380 lbs	
...resultant ecc.	=	8.24 in	
Eccentricity outside middle third			
Soil Pressure @ Toe	=	1,208 psf	OK
Soil Pressure @ Heel	=	0 psf	OK
Allowable	=	1,500 psf	
Soil Pressure Less Than Allowable			
ACI Factored @ Toe	=	1,692 psf	
ACI Factored @ Heel	=	0 psf	
Footing Shear @ Toe	=	15.6 psi	OK
Footing Shear @ Heel	=	8.3 psi	OK
Allowable	=	75.0 psi	

Sliding Calcs

Lateral Sliding Force	=	1,154.3 lbs	
less 100% Passive Force	-	843.8 lbs	
less 100% Friction Force	-	952.0 lbs	
Added Force Req'd	=	0.0 lbs	OK
....for 1.5 Stability	=	0.0 lbs	OK

Vertical component of active lateral soil pressure IS NOT considered in the calculation of soil bearing

Load Factors

Building Code	
Dead Load	1.200
Live Load	1.600
Earth, H	1.600
Wind, W	1.600
Seismic, E	1.000

Stem Construction

		Bottom		
		Stem OK		
Design Height Above Ftg	ft =	0.00		
Wall Material Above "Ht"	=	Concrete		
Design Method	=	SD	SD	SD
Thickness	=	8.00		
Rebar Size	=	# 4		
Rebar Spacing	=	10.00		
Rebar Placed at	=	Edge		
Design Data				
fb/FB + fa/Fa	=	**0.732**		
Total Force @ Section				
Service Level	lbs =			
Strength Level	lbs =	1,390.0		
Moment....Actual				
Service Level	ft-# =			
Strength Level	ft-# =	3,194.5		
Moment.....Allowable	=	4,364.1		
Shear.....Actual				
Service Level	psi =			
Strength Level	psi =	18.5		
Shear.....Allowable	psi =	44.2		
Anet (Masonry)	in2 =			
Wall Weight	psf =	100.0		
Rebar Depth 'd'	in =	6.25		

Masonry Data

f'm	psi =	
Fs	psi =	
Solid Grouting	=	
Modular Ratio 'n'	=	
Equiv. Solid Thick.	=	
Masonry Block Type	=	
Masonry Design Method	=	ASD

Concrete Data

f'c	psi =	2,500.0
Fy	psi =	40,000.0

Project Title:
Engineer:
Project ID:
Project Descr:

Cantilevered Retaining Wall

Project File: 23-043.ec6

LIC# : KW-06016495, Build:20.23.08.30 CK Engineering LLC (c) ENERCALC INC 1983-2023

DESCRIPTION: 6ft ret. wall with Key

Concrete Stem Rebar Area Details

Bottom Stem	Vertical Reinforcing	Horizontal Reinforcing	
As (based on applied moment) :	0.1795 in2/ft		
0.0018bh : 0.0018(12)(8) :	0.1728 in2/ft	Horizontal Reinforcing Options :	
	==========	One layer of :	Two layers of :
Required Area :	0.1795 in2/ft	#4@ 13.89 in	#4@ 27.78 in
Provided Area :	0.24 in2/ft	#5@ 21.53 in	#5@ 43.06 in
Maximum Area :	1.27 in2/ft	#6@ 30.56 in	#6@ 61.11 in

Footing Data

Toe Width	=	2.00 ft
Heel Width	=	2.00
Total Footing Width	=	4.00
Footing Thickness	=	12.00 in
Key Width	=	8.00 in
Key Depth	=	30.00 in
Key Distance from Toe	=	2.00 ft

f'c = 2,500 psi Fy = 40,000 psi
Footing Concrete Density = 150.00 pcf
Min. As % = 0.0018
Cover @ Top 2.00 @ Btm.= 3.00 in

Footing Design Results

		Toe		Heel	
Factored Pressure	=	1,692		0	psf
Mu' : Upward	=	2,811		148	ft-#
Mu' : Downward	=	360		864	ft-#
Mu: Design	=	2,451	OK	716	ft-# OK
phiMn	=	6,646		7,432	ft-#
Actual 1-Way Shear	=	15.63		8.32	psi
Allow 1-Way Shear	=	75.00		75.00	psi

Toe Reinforcing = # 4 @ 9.26 in
Heel Reinforcing = # 4 @ 9.25 in
Key Reinforcing = # 4 @ 10.00 in
Footing Torsion, Tu = 0.00 ft-lbs
Footing Allow. Torsion, phi Tu = 0.00 ft-lbs

If torsion exceeds allowable, provide supplemental design for footing torsion.

Other Acceptable Sizes & Spacings

Toe: #4@ 9.25 in, #5@ 14.35 in, #6@ 20.37 in, #7@ 27.77 in, #8@ 36.57 in, #9@ 46.29 in, #10@ 58.79 in

Heel: #4@ 9.25 in, #5@ 14.35 in, #6@ 20.37 in, #7@ 27.77 in, #8@ 36.57 in, #9@ 46.29 in, #10@ 58.79 in

Key: #4@ 10 in, #5@ 15.5 in, #6@ 18 in, #7@ 18 in,

Min footing T&S reinf Area 1.04 in2
Min footing T&S reinf Area per foot 0.26 in2 /ft

If one layer of horizontal bars:	If two layers of horizontal bars:
#4@ 9.26 in	#4@ 18.52 in
#5@ 14.35 in	#5@ 28.70 in
#6@ 20.37 in	#6@ 40.74 in

Project Title:
Engineer:
Project ID:
Project Descr:

Cantilevered Retaining Wall

Project File: 23-043.ec6

LIC# : KW-06016495, Build:20.23.08.30 CK Engineering LLC (c) ENERCALC INC 1983-2023

DESCRIPTION: 6ft ret. wall with Key

Summary of Overturning & Resisting Forces & Moments

Item		.....OVERTURNING..... Force lbs	Distance ft	Moment ft-#		.....RESISTING..... Force lbs	Distance ft	Moment ft-#
HL Act Pres (ab water tbl)		857.5	2.33	2,000.8	Soil Over HL (ab. water tbl)	880.0	3.33	2,933.3
HL Act Pres (be water tbl)					Soil Over HL (bel. water tbl)		3.33	2,933.3
Hydrostatic Force					Water Table			
Buoyant Force	=				Sloped Soil Over Heel	=		
Surcharge over Heel	=				Surcharge Over Heel	=		
Surcharge Over Toe	=				Adjacent Footing Load	=		
Adjacent Footing Load	=				Axial Dead Load on Stem	=		
Added Lateral Load	=				* Axial Live Load on Stem	=		
Load @ Stem Above Soil	=				Soil Over Toe	=		
Seismic Earth Load	=	205.8	3.50	720.3	Surcharge Over Toe	=		
Seismic Stem Self Wt	=	91.0	4.25	386.8	Stem Weight(s)	=	650.0	2.33	1,516.7
					Earth @ Stem Transitions	=		
					Footing Weight	=	600.0	2.00	1,200.0
					Key Weight	=	250.0	2.33	583.3
					Vert. Component	=			
Total	=	1,154.3	**O.T.M.** =	3,107.9	**Total =**		2,380.0 lbs	**R.M.=**	6,233.3

Resisting/Overturning Ratio = **2.01**

Vertical Loads used for Soil Pressure = 2,380.0 lbs

* Axial live load NOT included in total displayed, or used for overturning resistance, but is included for soil pressure calculation.

If seismic is included, the OTM and sliding ratios may be 1.1 per section 1807.2.3 of IBC.

Vertical component of active lateral soil pressure IS NOT considered in the calculation of Sliding Resistance.

Vertical component of active lateral soil pressure IS NOT considered in the calculation of Overturning Resistance.

Tilt

Horizontal Deflection at Top of Wall due to settlement of soil

(Deflection due to wall bending not considered)

Soil Spring Reaction Modulus	250.0	pci
Horizontal Defl @ Top of Wall (approximate only)	0.055	in

The above calculation is not valid if the heel soil bearing pressure exceeds that of the toe, because the wall would then tend to rotate into the retained soil.

Cantilevered Retaining Wall

LIC# : KW-06016495, Build:20.23.08.30 CK Engineering LLC (c) ENERCALC INC 1983-2023

DESCRIPTION: 6ft ret. wall with Key

Rebar Lap & Embedment Lengths Information

Stem Design Segment: Bottom
Stem Design Height: 0.00 ft above top of footing

Lap Splice length for #4 bar specified in this stem design segment (25.4.2.4a) =	15.60 in
Development length for #4 bar specified in this stem design segment =	12.00 in
Hooked embedment length into footing for #4 bar specified in this stem design segment =	0.00 in
As Provided =	0.2400 in2/ft
As Required =	0.2394 in2/ft

Project Title:
Engineer:
Project ID:
Project Descr:

Cantilevered Retaining Wall

Project File: 23-043.ec6

LIC# : KW-06016495, Build:20.23.08.30 CK Engineering LLC (c) ENERCALC INC 1983-2023

DESCRIPTION: 6ft ret. wall with Key

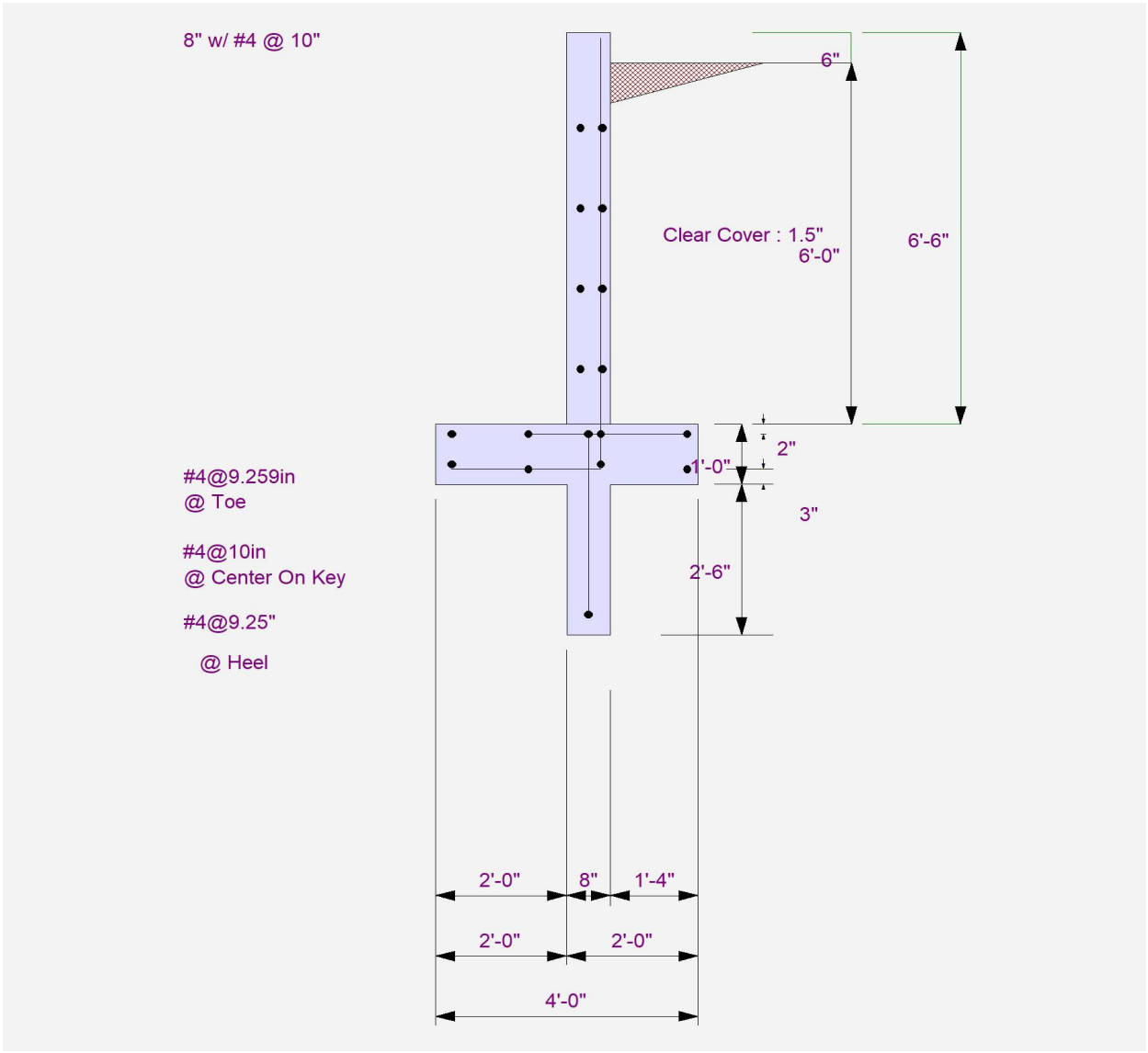

Project Title:
Engineer:
Project ID:
Project Descr:

Cantilevered Retaining Wall

Project File: 23-043.ec6

LIC# : KW-06016495, Build:20.23.08.30 CK Engineering LLC (c) ENERCALC INC 1983-2023

DESCRIPTION: 6ft ret. wall with Key

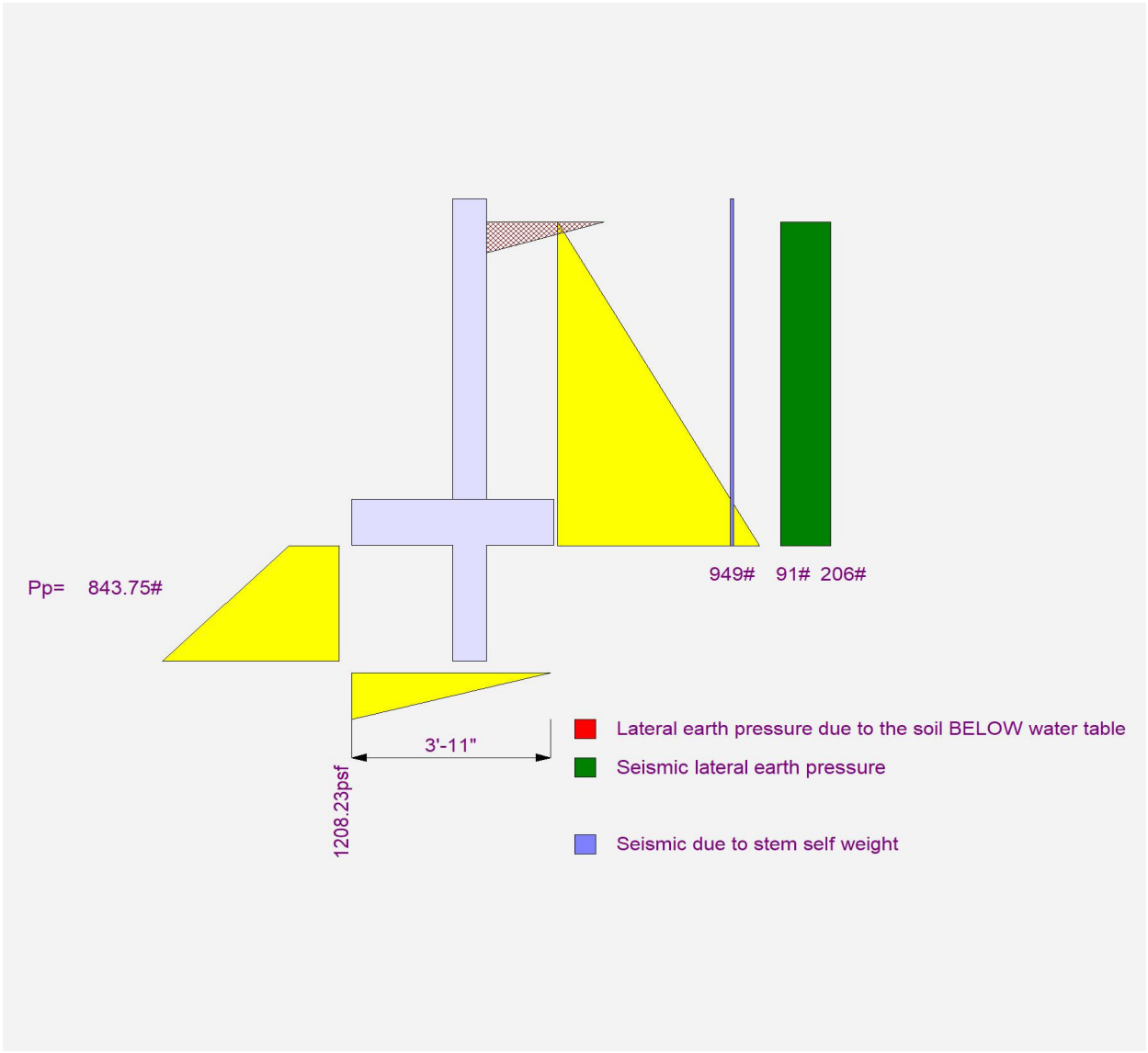

Project Title:
Engineer:
Project ID:
Project Descr:

Cantilevered Retaining Wall

Project File: 23-043.ec6

LIC# : KW-06016495, Build:20.23.04.05 CK Engineering LLC (c) ENERCALC INC 1983-2023

DESCRIPTION: 10ft wall

Code Reference

Calculations per IBC 2021 1807.3, ASCE 7-16

Criteria

Retained Height	=	10.00 ft
Wall height above soil	=	0.50 ft
Slope Behind Wall	=	0.00
Height of Soil over Toe	=	0.00 in
Water table above bottom of footing	=	0.0 ft

Soil Data

Allow Soil Bearing	=	1,500.0 psf
Equivalent Fluid Pressure Method		
Active Heel Pressure	=	35.0 psf/ft
	=	
Passive Pressure	=	150.0 psf/ft
Soil Density, Heel	=	110.00 pcf
Soil Density, Toe	=	110.00 pcf
Footing||Soil Friction	=	0.400
Soil height to ignore for passive pressure	=	12.00 in

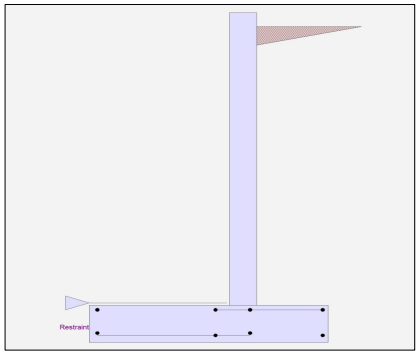

Surcharge Loads

Surcharge Over Heel	=	0.0 psf
Used To Resist Sliding & Overturning		
Surcharge Over Toe	=	0.0
Used for Sliding & Overturning		

Lateral Load Applied to Stem

Lateral Load	=	0.0 #/ft
...Height to Top	=	0.00 ft
...Height to Bottom	=	0.00 ft
Load Type	=	Wind (W) (Service Level)
Wind on Exposed Stem (Strength Level)	=	0.0 psf

Adjacent Footing Load

Adjacent Footing Load	=	0.0 lbs
Footing Width	=	0.00 ft
Eccentricity	=	0.00 in
Wall to Ftg CL Dist	=	0.00 ft
Footing Type		Spread Footing
Base Above/Below Soil at Back of Wall	=	0.0 ft
Poisson's Ratio	=	0.300

Axial Load Applied to Stem

Axial Dead Load	=	0.0 lbs
Axial Live Load	=	0.0 lbs
Axial Load Eccentricity	=	0.0 in

Earth Pressure Seismic Load

Method : Uniform		
Multiplier Used	=	10.000
(Multiplier used on soil density)		

Uniform Seismic Force	=	113.333
Total Seismic Force	=	1,284.444

Project Title:
Engineer:
Project ID:
Project Descr:

Cantilevered Retaining Wall

Project File: 23-043.ec6

LIC# : KW-06016495, Build:20.23.04.05 CK Engineering LLC (c) ENERCALC INC 1983-2023

DESCRIPTION: 10ft wall

Design Summary

Wall Stability Ratios

Overturning	=	1.92	OK
Slab Resists All Sliding !			
Global Stability	=	1.56	
Total Bearing Load	=	5,146 lbs	
...resultant ecc.	=	14.37 in	
Eccentricity within middle third			
Soil Pressure @ Toe	=	1,413 psf	OK
Soil Pressure @ Heel	=	6 psf	OK
Allowable	=	1,500 psf	
Soil Pressure Less Than Allowable			
ACI Factored @ Toe	=	1,978 psf	
ACI Factored @ Heel	=	9 psf	
Footing Shear @ Toe	=	27.9 psi	OK
Footing Shear @ Heel	=	16.8 psi	OK
Allowable	=	75.0 psi	

Sliding Calcs

Lateral Sliding Force	=	3,146.9 lbs

Vertical component of active lateral soil pressure IS NOT considered in the calculation of soil bearing

Load Factors

Building Code	
Dead Load	1.200
Live Load	1.600
Earth, H	1.600
Wind, W	1.600
Seismic, E	1.000

Stem Construction

		Bottom		
		Stem OK		
Design Height Above Ftg	ft =	0.00		
Wall Material Above "Ht"	=	Concrete		
Design Method	=	SD	SD	SD
Thickness	=	10.00		
Rebar Size	=	# 6		
Rebar Spacing	=	10.00		
Rebar Placed at	=	Edge		
Design Data				
fb/FB + fa/Fa	=	**0.901**		
Total Force @ Section				
Service Level	lbs =			
Strength Level	lbs =	3,933.3		
Moment....Actual				
Service Level	ft-# =			
Strength Level	ft-# =	15,000.0		
Moment.....Allowable	=	16,636.7		
Shear.....Actual				
Service Level	psi =			
Strength Level	psi =	43.0		
Shear.....Allowable	psi =	53.8		
Anet (Masonry)	in2 =			
Wall Weight	psf =	125.0		
Rebar Depth 'd'	in =	7.63		

Masonry Data

f'm	psi =	
Fs	psi =	
Solid Grouting	=	
Modular Ratio 'n'	=	
Equiv. Solid Thick.	=	
Masonry Block Type	=	
Masonry Design Method	=	ASD

Concrete Data

f'c	psi =	2,500.0
Fy	psi =	60,000.0

Project Title:
Engineer:
Project ID:
Project Descr:

Cantilevered Retaining Wall

Project File: 23-043.ec6

LIC# : KW-06016495, Build:20.23.04.05 CK Engineering LLC (c) ENERCALC INC 1983-2023

DESCRIPTION: 10ft wall

Concrete Stem Rebar Area Details

Bottom Stem	Vertical Reinforcing	Horizontal Reinforcing	
As (based on applied moment) :	0.4562 in2/ft		
0.0018bh : 0.0018(12)(10) :	0.216 in2/ft	Horizontal Reinforcing Options :	
	==========	One layer of :	Two layers of :
Required Area :	0.4562 in2/ft	#4@ 11.11 in	#4@ 22.22 in
Provided Area :	0.528 in2/ft	#5@ 17.22 in	#5@ 34.44 in
Maximum Area :	1.0329 in2/ft	#6@ 24.44 in	#6@ 48.89 in

Footing Data

Toe Width	=	4.25 ft
Heel Width	=	3.00
Total Footing Width	=	7.25
Footing Thickness	=	16.00 in
Key Width	=	0.00 in
Key Depth	=	0.00 in
Key Distance from Toe	=	0.00 ft

f'c = 2,500 psi Fy = 60,000 psi
Footing Concrete Density = 150.00 pcf
Min. As % = 0.0018
Cover @ Top 2.00 @ Btm.= 3.00 in

Footing Design Results

		Toe		Heel	
Factored Pressure	=	1,978		9	psf
Mu' : Upward	=	14,392		482	ft-#
Mu' : Downward	=	2,168		3,662	ft-#
Mu: Design	=	12,224	OK	3,180	ft-# OK
phiMn	=	19,099		20,660	ft-#
Actual 1-Way Shear	=	27.86		16.81	psi
Allow 1-Way Shear	=	75.00		75.00	psi
Toe Reinforcing	=	# 5 @ 10.76 in			
Heel Reinforcing	=	# 5 @ 10.76 in			
Key Reinforcing	=	None Spec'd			
Footing Torsion, Tu	=	0.00	ft-lbs		
Footing Allow. Torsion, phi Tu	=	0.00	ft-lbs		

If torsion exceeds allowable, provide supplemental design for footing torsion.

Other Acceptable Sizes & Spacings

Toe: #4@ 6.94 in, #5@ 10.76 in, #6@ 15.27 in, #7@ 20.83 in, #8@ 27.43 in, #9@ 34.72 in, #10@ 44.09 in

Heel: #4@ 6.94 in, #5@ 10.76 in, #6@ 15.27 in, #7@ 20.83 in, #8@ 27.43 in, #9@ 34.72 in, #10@ 44.09 in

Key: No key defined

Min footing T&S reinf Area 2.51 in2
Min footing T&S reinf Area per foot 0.35 in2 /ft

If one layer of horizontal bars:	If two layers of horizontal bars:
#4@ 6.94 in	#4@ 13.89 in
#5@ 10.76 in	#5@ 21.53 in
#6@ 15.28 in	#6@ 30.56 in

Project Title:
Engineer:
Project ID:
Project Descr:

Cantilevered Retaining Wall

Project File: 23-043.ec6

LIC# : KW-06016495, Build:20.23.04.05 CK Engineering LLC (c) ENERCALC INC 1983-2023

DESCRIPTION: 10ft wall

Summary of Overturning & Resisting Forces & Moments

Item		.....OVERTURNING..... Force lbs	Distance ft	Moment ft-#		.....RESISTING..... Force lbs	Distance ft	Moment ft-#
HL Act Pres (ab water tbl)		2,247.8	3.78	8,491.6	Soil Over HL (ab. water tbl)	2,383.3	6.17	14,697.2
HL Act Pres (be water tbl)					Soil Over HL (bel. water tbl)		6.17	14,697.2
Hydrostatic Force					Water Table			
Buoyant Force	=				Sloped Soil Over Heel	=		
Surcharge over Heel	=				Surcharge Over Heel	=		
Surcharge Over Toe	=				Adjacent Footing Load	=		
Adjacent Footing Load	=				Axial Dead Load on Stem	=		
Added Lateral Load	=				* Axial Live Load on Stem	=		
Load @ Stem Above Soil	=				Soil Over Toe	=		
Seismic Earth Load	=	899.1	5.67	5,095.0	Surcharge Over Toe	=		
	=				Stem Weight(s)	=	1,312.5	4.67	6,125.0
					Earth @ Stem Transitions	=			
Total	=	3,146.9	**O.T.M.** =	13,586.6	Footing Weight	=	1,450.0	3.63	5,256.3
					Key Weight	=			
					Vert. Component	=			
					Total =		5,145.8 lbs	**R.M.=**	26,078.5

Resisting/Overturning Ratio = **1.92**

Vertical Loads used for Soil Pressure = 5,145.8 lbs

* Axial live load NOT included in total displayed, or used for overturning resistance, but is included for soil pressure calculation.

If seismic is included, the OTM and sliding ratios may be 1.1 per section 1807.2.3 of IBC.

Vertical component of active lateral soil pressure IS NOT considered in the calculation of Sliding Resistance.

Vertical component of active lateral soil pressure IS NOT considered in the calculation of Overturning Resistance.

Tilt

Horizontal Deflection at Top of Wall due to settlement of soil

(Deflection due to wall bending not considered)

Soil Spring Reaction Modulus	250.0	pci
Horizontal Defl @ Top of Wall (approximate only)	0.057	in

The above calculation is not valid if the heel soil bearing pressure exceeds that of the toe, because the wall would then tend to rotate into the retained soil.

DESCRIPTION: 10ft wall

Rebar Lap & Embedment Lengths Information

Stem Design Segment: Bottom
Stem Design Height: 0.00 ft above top of footing

Lap Splice length for #6 bar specified in this stem design segment (25.4.2.4a) =	28.08 in
Development length for #6 bar specified in this stem design segment =	21.60 in
Hooked embedment length into footing for #6 bar specified in this stem design segment =	12.60 in
As Provided =	0.5280 in2/ft
As Required =	0.4562 in2/ft

Project Title:
Engineer:
Project ID:
Project Descr:

Cantilevered Retaining Wall

Project File: 23-043.ec6

LIC# : KW-06016495, Build:20.23.04.05 CK Engineering LLC (c) ENERCALC INC 1983-2023

DESCRIPTION: 10ft wall

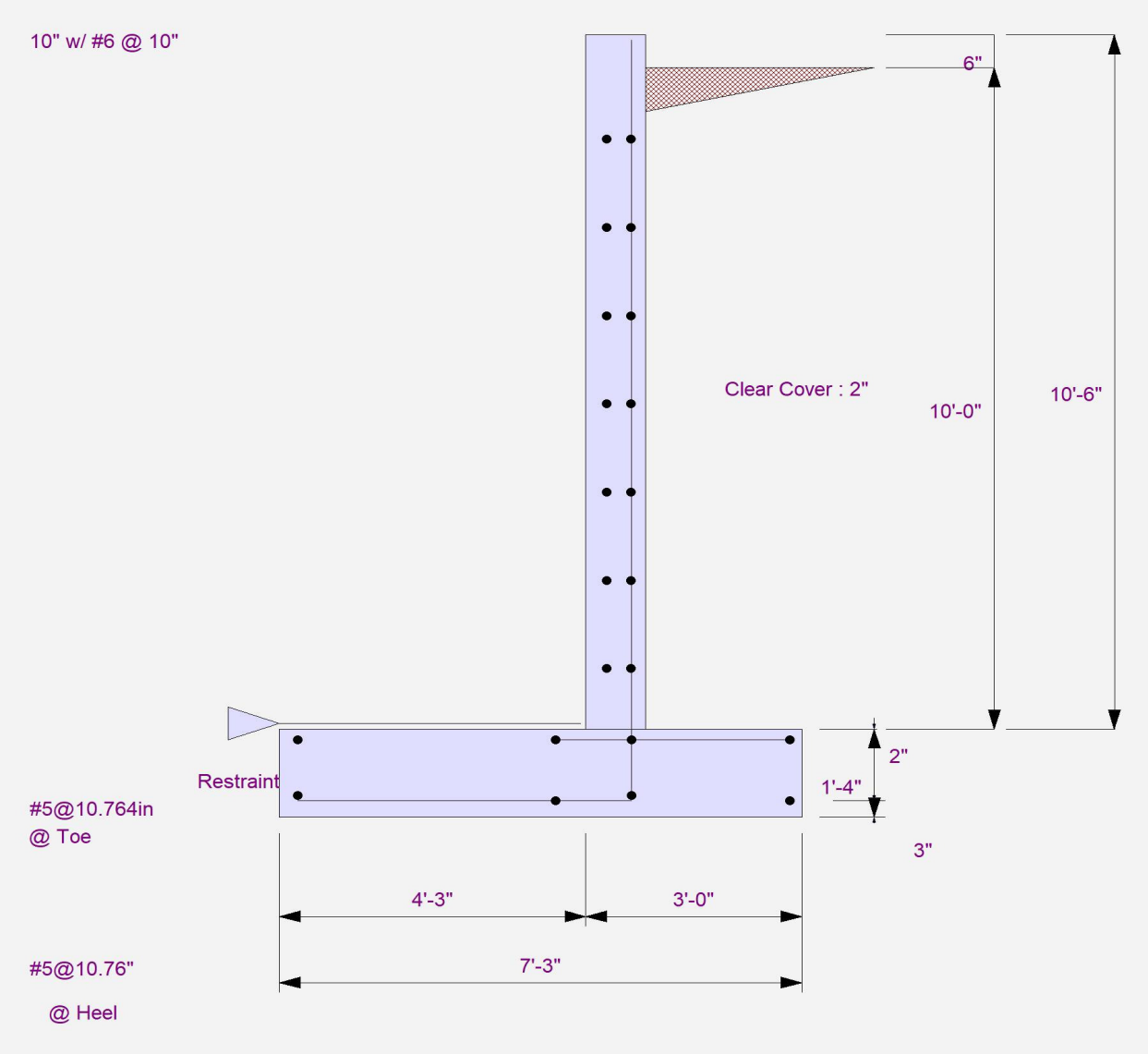

Project Title:
Engineer:
Project ID:
Project Descr:

Cantilevered Retaining Wall

Project File: 23-043.ec6

LIC# : KW-06016495, Build:20.23.04.05 CK Engineering LLC (c) ENERCALC INC 1983-2023
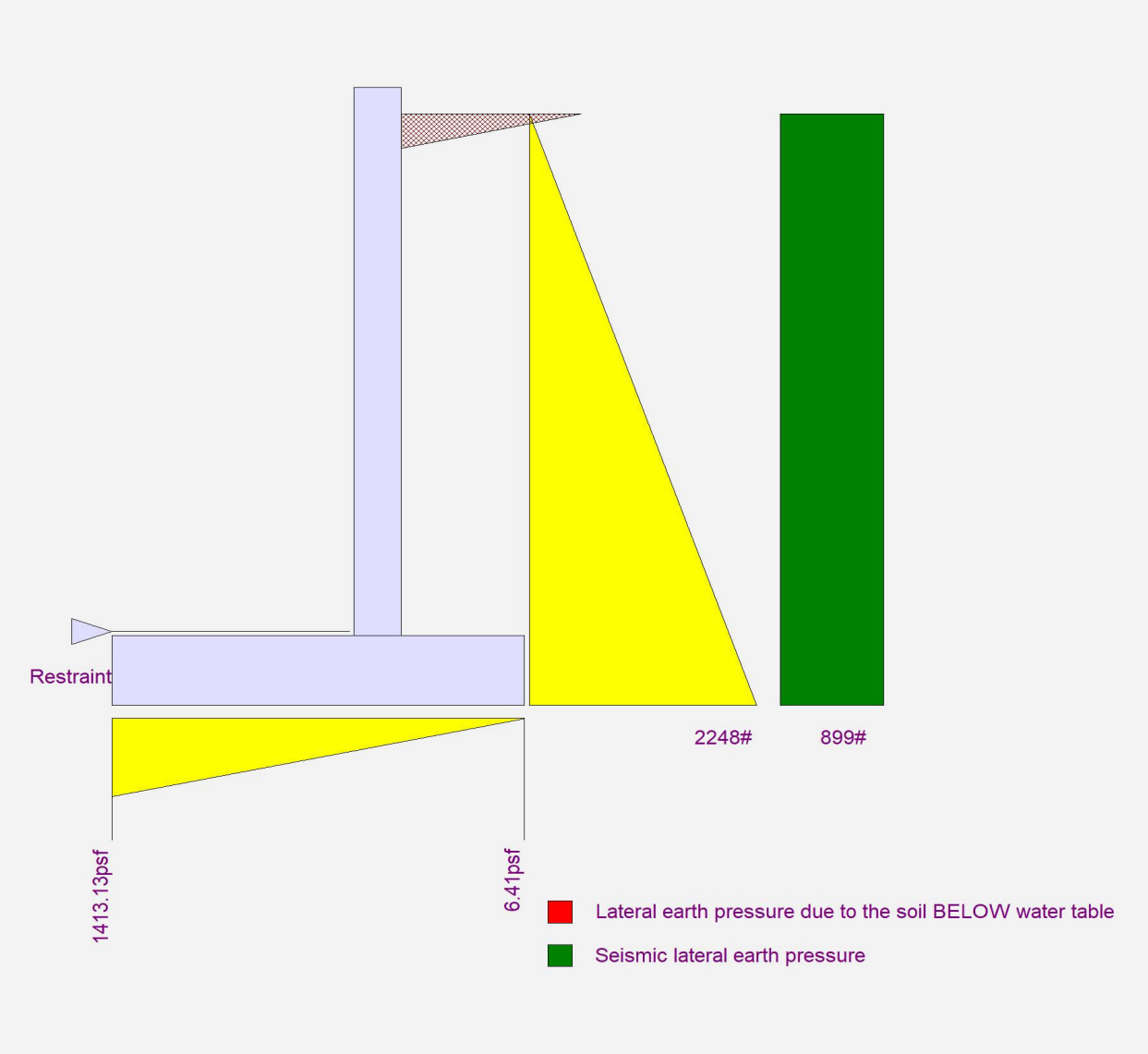
DESCRIPTION: 10ft wall